NZBC Clause B1 Structure - Design

Seismic Restraint of Non-Structural Building Elements

Project number:	23060268-01C
Company name:	NACCI Timber Systems
Date:	30/10/2024
Location:	Auckland, Tauranga, Wellington, Christchurch

Victoria Park Market, Unit 72B, 210 Victoria Street,
Auckland 1010, New Zealand.

p: +64 9 216 7104
e: info@teambrevity.com

Building Code Clause(s) B1

PRODUCER STATEMENT – PS1 – DESIGN

(Guidance on use of Producer Statements (formerly page 2) is available at www.engineeringnz.org)

ISSUED BY: Brevity Ltd
(Design Firm)

TO: NACCI Timber Systems
(Owner/Developer)

TO BE SUPPLIED TO: Building Consent Authority
(Building Consent Authority)

IN RESPECT OF: Brevity report # 23060268-01C Design of Non-Structural Building Elements
(Description of Building Work)

AT: Auckland, Tauranga, Wellington, Christchurch
(Address)

Town/City: Various **LOT** - **DP** - **SO** -
(Address)

We have been engaged by the owner/developer referred to above to provide:

Design Consultancy for seismic restraint of non-structural building elements

(Extent of Engagement)

services in respect of the requirements of Clause(s) B1 of the Building Code for:

☐ All or ☒ Part only (as specified in the attachment to this statement), of the proposed building work.

The design carried out by us has been prepared in accordance with:

☒ Compliance Documents issued by the Ministry of Business, Innovation & Employment B1/VM1 or
(verification method/acceptable solution)

☐ Alternative solution as per the attached schedule

The proposed building work covered by this producer statement is described on the drawings titled:

NACCI TIMBER SYSTEMS and numbered 23060268-01;
together with the specification, and other documents set out in the schedule attached to this statement.

On behalf of the Design Firm, and subject to:
(i) Site verification of the following design assumptions see attached report
(ii) All proprietary products meeting their performance specification requirements;

I believe on reasonable grounds that a) the building, if constructed in accordance with the drawings, specifications, and other documents provided or listed in the attached schedule, will comply with the relevant provisions of the Building Code and that b), the persons who have undertaken the design have the necessary competency to do so. I also recommend the following level of construction monitoring/observation:

☐ CM1 ☐ CM2 ☒ CM3 ☐ CM4 ☐ CM5 (Engineering Categories) or ☐ as per agreement with owner/developer (Architectural)

I, Matt Bishop am: ☒ CPEng 243276 # ☐ Reg Arch ..... #
(Name of Design Professional)

I am a member of: ☒ Engineering New Zealand ☐ NZIA and hold the following qualifications: BE (Hons)
The Design Firm issuing this statement holds a current policy of Professional Indemnity Insurance no less than $200,000*.
The Design Firm is a member of ACENZ: ☒

SIGNED BY Matt Bishop (Signature)
(Name of Design Professional)

ON BEHALF OF Brevity Ltd Date 31 October 2024
(Design Firm)

Note: This statement shall only be relied upon by the Building Consent Authority named above. Liability under this statement accrues to the Design Firm only. The total maximum amount of damages payable arising from this statement and all other statements provided to the Building Consent Authority in relation to this building work, whether in contract, tort or otherwise (including negligence), is limited to the sum of $200,000.*

This form is to accompany **Form 2 of the Building (Forms) Regulations 2004** for the application of a Building Consent.

THIS FORM AND ITS CONDITIONS ARE COPYRIGHT TO ACENZ, ENGINEERING NEW ZEALAND AND NZIA

Contents

Document Revision History 2

1. Overview **3**

2. Design Methodology **4**
   - Loading 4
   - Assumptions 4
   - Load transfer mechanism (load path) 5
   - Interstory Drift 5
   - Material Strength 5
   - Concrete Anchors 5

3. Construction Monitoring **6**

4. Our Contact Details **8**

Document Revision History

Rev	Date	Revision details	Author	Approved
A	04/10/2024	For Consent	PM	MB
B	09/10/2024	TCR Spacing Update	PM	MB
C	30/10/2024	Note Added for TCR Spacing	SM	MB

1. Overview

Brevity has been engaged to provide Chartered Engineer's PS1 - Design for Seismic Restraint of Non-Structural Building Elements within the specified building. This report details the engineering design criteria and records, key decisions and outcomes as per NZS 1170.5:2004. It also outlines design loading, structural modelling assumptions, material properties and design standards.

All information, details or designs portrayed in this document remain the copyright of Brevity Ltd (Brevity), unless Brevity has expressly agreed otherwise with the client. Any reproduction without the express permission of Brevity is prohibited.

This report has been prepared by Brevity on the specific instructions of our client. It is solely for our client's use for the purpose for which it is intended in accordance with the agreed scope of work. Any use or reliance by any person contrary to the above, to which Brevity has not given its prior written consent, is at that person's risk.

2. Design Methodology

Loading

In accordance with the New Zealand Building Code Section B1 by Specific Engineering Design to VM1, the engineering system seismic performance was checked to the following loading standards:

- AS/NZS 1170.0:2002 - General Principles
- NZS 1170.5:2004 - Earthquake Actions

Non-structural building elements are treated as "Parts" as per NZS 1170.5:2004 - Section 8, and the following Part Category Classifications apply:

Part Category Classification

Fall Height	Weight	Component Category	Structure Limit State
Any	> 7.5 kg	P2/P3	ULS
Any	Any	P5	SLS2
<3m	< 7.5 kg	P7	SLS1

Combinations of actions for strength and stability have been assessed in accordance with AS/NZS 1170.0 Section 4.

The building structure and parameters for this design can be found in the drawing specification schedule. Marked up plans have been supplied to identify required seismic restraint design and form the basis of our design, along with supporting detail design drawings.

Assumptions

Non-structural building elements have been designed for seismic performance in accordance with the above standards utilising the following assumptions:

1. Installation details of proprietary systems are to be in accordance with manufacturer's specifications.
2. Where restraints are fixed to the structure, the structure must be capable of withstanding the loads outlined in the specification. This is to be validated by others, unless otherwise specified.
3. Design for durability and corrosion resistance by others or to manufacturer's specifications.
4. Floor accelerations determined from the equivalent static method of NZS 1170.5, unless otherwise specified.
5. Restrained systems are not resonant to seismic driving frequencies (response periods less than 0.75 seconds).
6. The near fault factor maximum of 1.0 has been used.

Load Transfer Mechanism (Load Path)

In general, horizontal seismic loads are transferred axially through the non-structural building element. This load is transferred into the structure through the following mechanisms:

- Connection to non-structural or structural walls (For eg. perimeter fixed ceilings)
- Connection to the structure above (For eg. back-braced ceilings, braced partial-height partitions, full-height partitions, suspended services)
- Connection to the structure below (For eg. partitions, floor mounted services)

The non-structural building elements and the associated seismic restraints have been designed to transfer these axial loads into the structure.

Interstory Drift

Building interstory drift has been accommodated by one of the following mechanisms:

- Perimeter gaps to stop relatively stiff non-structural components (plasterboard walls and ceilings) contacting with moving superstructure.
- Separation between components and superstructure (services).

Without specific building interstory drift values, 2.5% relative movement has been adopted as per NZS 1170.5:2004 Clause 7.5.1.

Material Strength

Specified materials have been validated to the following standards:

- AS/NZS 4600:2018 - Cold-Formed Steel Structures.
- AS/NZS 1664.1 - Aluminium Structures.
- NZS 3603:1993 - Timber Structures.
- NZS 3404.1:1997 - Steel Structures.

Specific Systems

Specified systems have been validated to the following standards:

- NZS 4219:2009 - Seismic Performance Of Engineering Systems In Buildings.
- NZS 4541:2020 - Automatic fire sprinkler systems.
- AS/NZS 2785:2020 - Suspended Ceilings - Design and Installation.

Guidelines and clearances are to be maintained in accordance to NZS 4219:2009.

In the case of seismic anchors, specified post-installed concrete anchors shall be tested to either of the following standards when installed in structural concrete elements designed to NZS 3101:

- ACI 355.2:2007
- ETAG 001: Annex E

Powder actuated (shot fired) fasteners shall not be used in concrete for seismic installation.

3. Construction Monitoring

Construction monitoring is to be carried out before finishes are installed (e.g. linings or tiles).

The following table outlines guidance for the required elements to be inspected for issuance of a Producer Statement - PS4 - Construction Review:

Element	Random Sampling	Stage	Person
Structure: - Ceiling grid and braces - Partition studs and braces - Services bracing - Connections	100% Visual Scan[1] 5% Visual Inspection[2] 10% Measuring spacing Clearance Distances Compare to Brevity plans	Structure complete Before linings or tiles installed	Site Engineer
Infill - Plasterboard - Tiles - Linings	Confirm Size/Type Service Load	Build Complete	Site Engineer

[1]Where Visual Scan is required, floor level access is to be supplied by the client.

[2]Where Visual Inspection is required, access is to be supplied by the client to allow measurement of specific details such as section sizes, BMT, fastener centers, edge distances.

We recommend CM3 level of construction monitoring for this project. Please see the following page for a description of the various levels.

CM1 Review
Monitor the outputs from another party's quality assurance programme against the requirements of the plans and specifications. Visit the works at a frequency agreed with the client to review important materials of construction critical work procedures and/or completed plant or components. Be available to advise the constructor on the technical interpretation of the plans and specifications

This level is only a secondary service. It may be appropriate where:
- For the design consultant when another party is engaged to provide a higher level of construction monitoring or review during the period of construction or
– When the project works are the subject of a performance based specification and performance testing is undertaken and monitored by others.

CM2 Review
Review, preferably at the earliest opportunity, a sample of each important work procedure, material of construction and component for compliance with the requirements of the plans and specifications and review a representative sample of each important completed work prior to enclosure or completion as appropriate. Be available to provide the constructor with technical interpretation of the plans and specifications.

This level of service is appropriate for smaller projects of a routine nature being undertaken by an experienced and competent constructor and where a higher than normal risk of non-compliance is acceptable. It provides for the review of a representative sample of work procedures and materials of construction. The assurance of compliance of the finished work is dependent upon the constructor completing the work to at least the same standard as the representative sample reviewed.

CM3 Review
Review, to an extent agreed with the client, random samples of important work procedures, for compliance with the requirements of the plans and specifications and review important completed work prior to enclosure or on completion as appropriate. Be available to provide the constructor with technical interpretation of the plans and specifications.

This level of service is appropriate for medium sized projects of a routine nature being undertaken by an experienced constructor when a normal risk of non-compliance is acceptable.

CM4 Review
Review, at a frequency agreed with the client, regular samples of the work procedures, materials of construction and components for compliance with the requirements of the plans and specifications and review the majority of completed work prior to the enclosure or on completion as appropriate.

This level of service is appropriate for projects where a lower than normal risk of non-compliance is required.

CM5 Review
Maintain personnel on site to constantly review work procedures, materials of construction and components for compliance with the requirements of the plans and specifications and review completed work prior to enclosure or con completion as appropriate.

This level of service is appropriate for: Major projects, Projects where the consequences of failure are critical, Projects involving innovative or complex construction procedures. The level of service provides the client with the greatest assurance that the completed work complies with the requirements of the plans and specifications.

4. Our Contact Details

Engineer's contact details for this report

Contact	Contact details
This report was prepared by	Phoenix Matautia-Carmont
Email	engineering@teambrevity.com

Auckland office

Contact	Contact details
Main office phone	+64 9 216 7104
Email for all enquiries	info@teambrevity.com
Mailing address	Victoria Park Market, Unit 72B, 210 Victoria Street, Auckland 1010, New Zealand.

1.0 CONTRACTOR REQUIREMENTS

1.1 PRE-INSTALLATION COORDINATION WITH OTHER SERVICES

THE CEILING CONTRACTOR SHALL COORDINATE WITH OTHER SERVICE CONTRACTORS TO ENSURE:

-THE CEILING STRUCTURE IS ADEQUATE TO SUPPORT THE IMPOSED SERVICE LOADS.
-ADEQUATE CLEARANCE DISTANCE BETWEEN SERVICES AND THEIR RESTRAINTS WILL BE ACHIEVED. REFER 2.5 CLEARANCE DISTANCES.
- NO ADVERSE INTERACTION BETWEEN SERVICES AND CEILINGS WILL OCCUR.

1.2 CONTRACTOR EXPERIENCE

THE CEILING CONTRACTOR IS ASSUMED TO BE FAMILIAR WITH THE INSTALLATION OF SUSPENDED CEILINGS AND THEIR SEISMIC RESTRAINT. A WORKING KNOWLEDGE OF THE FOLLOWING STANDARDS AND CODES OF PRACTICE IS EXPECTED:

- AS/NZS 2785:2000 SUSPENDED CEILINGS - DESIGN AND INSTALLATION
- NZS 4219:2009 SEISMIC PERFORMANCE OF ENGINEERING SYSTEMS IN BUILDINGS
- NZS 4541:2013 AUTOMATIC FIRE SPRINKLER SYSTEMS
- AWCI SUSPENDED CEILINGS CODE OF PRACTICE

1.3 CONTRACTOR QUALITY ASSURANCE

THE CEILING CONTRACTOR SHALL BE RESPONSIBLE FOR ENSURING THE WORK IS INSTALLED AS PER THE DESIGN DOCUMENTATION.

1.4 VARIATIONS TO DESIGN

THE CEILING CONTRACTOR SHALL GET THE APPROVAL OF THE DESIGN ENGINEER PRIOR TO CARRYING OUT CHANGES TO THE CEILING INSTALLATION. REFER TO PS1 DOCUMENTATION FOR ENGINEER CONTACT DETAILS.

1.5 CONTRACTOR INSPECTIONS

THE CEILING CONTRACTOR SHALL PERIODICALLY CARRY OUT DETAILED VISUAL INSPECTION OF THE CEILING AND RESTRAINT INSTALLATION TO ENSURE IT IS IN ACCORDANCE WITH THE DESIGN DOCUMENTATION. RANDOM SAMPLING OF THE FOLLOWING SHALL BE CONDUCTED:

- PERIMETER FIXING: FIXED AND FLOATING EDGES
- CEILING HANGERS
- SEISMIC BRACE INSTALLATION
- SEISMIC SEPARATION JOINTS
- CLEARANCE DISTANCES BETWEEN SERVICES AND THEIR RESTRAINT
- FIXING OF SERVICES <10 KG TO THE CEILING GRID
- INDEPENDENT RESTRAINT AND CLEARANCE OF EQUIPMENT >10KG

FOLLOWING INSPECTION, THE CEILING CONTRACTOR SHALL PROVIDE A MARKED UP PLAN SHOWING AREAS INSPECTED AND ANY CLASHES, DEFECTS THAT NEED TO BE ADDRESSED PRIOR TO PROJECT COMPLETION.

1.6 PRODUCER STATEMENT PS-3 - CONSTRUCTION

THE CEILING CONTRACTOR SHALL PROVIDE A PRODUCER STATEMENT PS-3 TO THE ENGINEER AND A STATEMENT THAT ALL DEFECTS HAVE BEEN REMEDIED.

2.0 INSTALLATION REQUIREMENTS

2.1 CEILING GRID INSTALLATION

CEILING GRID TO BE INSTALLED IN ACCORDANCE WITH MANUFACTURER'S REQUIREMENTS. CEILING HANGERS SHALL NOT BE INSTALLED TO ANY EQUIPMENT OR SERVICES. WHERE THIS IS NOT POSSIBLE, A TRAPEZE HANGER MAY BE INSTALLED.

REFER TO SPECIFICATION SHEET AND BREVITY DRAWING 050-30 FOR ANCHOR CONNECTIONS.

2.2 INSTALLATION OF PARTITIONS

FULL HEIGHT PARTITIONS SHALL BE INSTALLED WITH A DEFLECTION HEAD DETAIL TO ALLOW FOR DIFFERENTIAL MOVEMENT BETWEEN FLOORS.

PARTIAL HEIGHT PARTITIONS SHALL BE INDEPENDENTLY BRACED TO THE OVERHEAD STRUCTURE

PARTITIONS USED FOR SEIMSIC BRACING OF CEILINGS SHALL BE DESIGNED TO RESIST THE IMPOSED LOADS AS CALCULATED BY THE ENGINEER.

REFER TO SPECIFICATION SHEET AND BREVITY DRAWING 050-30 FOR ANCHOR CONNECTIONS.

2.3 INSTALLATION OF SPRINKLERS

RIGID SPRINKLER DROPPERS AT CEILING LEVEL SHALL HAVE A MINIMUM CLEARANCE OF 25mm TO THE CEILING.

FLEXIBLE SPRINKLER DROPPERS MAY BE INSTALLED WITHOUT ANY CLEARNCE TO THE CEILING. REFER NZS 4541 FOR FUTHER DETAIL.

2.4 EQUIPMENT AT CEILING LEVEL

EQUIPMENT < 10 KG MAY BE SUSPENDED FROM THE CEILING WHEN COMPLIANT WITH FOLLOWING REQUIREMENTS:

- EQUIPMENT IS POSITIVELY FIXED TO THE CEILING GRID MAIN TEES.
- TOTAL EQUIPMENT LOAD DOES NOT EXCEED THE ALLOWABLE DISTRIBUTED SERVICE LOAD. REFER 3.4.

2.5 CLEARANCE DISTANCES

UNLESS OTHERWISE SPECIFIED, ALL CLEARANCE DISTANCES BETWEEN CEILING COMPONENTS AND OTHER SERVICES SHALL BE ACCORDANCE WITH TABLE 15 OF NZS 4219 (REPRODUCED BELOW).

CONDITION BEING CONSIDERED	MINIMUM CLEARANCE (mm)	
	HORIZONTAL	VERTICAL
UNRESTRAINED TO UNRESTRAINED COMPONENT	250	50
UNRESTRAINED TO RESTRAINED COMPONENT	150	50
RESTRAINED TO RESTRAINED COMPONENT	50	50
PENETRATION THROUGH STRUCTURE (E.G. WALLS, FLOORS)	50	50

CEILING HANGERS AND BRACES ARE CONSIDERED TO BE RESTRAINED COMPONENTS

3.0 DESIGN REQUIREMENTS

3.1 CONSTRUCTION MONITORING

CONSTRUCTION MONITORING BY THE ENGINEER AS PER THE CONSTRUCTION MONITORING SCHEDULE IS REQUIRED DURING CONSTRUCTION.

3.2 PRODUCER STATEMENT PS-4 CONSTRUCTION REVIEW

A PRODUCER STATEMENT PS-4 CANNOT BE PROVIDED WHEN COMPLIANCE WITH THE REQUIREMENTS OF THIS SPECIFICATION IS NOT ACHIEVED. A PRODUCER STATEMENT PS-3 IS REQUIRED PRIOR TO ISSUING A PS-4

3.3 DESIGN LOADS

EARTHQUAKE LOADS HAVE BEEN CALCULATED IN ACCORDANCE WITH AS/NZS 1170.5 SECTION 8 - PARTS ASSUMING THE PARAMETERS SHOWN IN TABLE 1 BELOW:

TABLE 1 - AS/NZS 1170.5 PARAMETERS

	P2/P3	P7
FALL HEIGHT	ANY	< 3m
WEIGHT	>7.5 kg	<7.5 kg
LIMIT STATE	ULS	SLS1
DUCTILITY	1.25	1

3.4 DISTRIBUTED SERVICE LOAD

THE DESIGN INCORPORATES A MAXIMUM ALLOWABLE DISTRIBUTED SERVICE LOAD OF 3 KG/M^2 AS PER AS/NZS 2785 CLAUSE 3.2.2. IF THE DISTRIBUTED LOAD IS TO EXCEED 3 KG/M^2 THEN CONSULTATION WITH THE DESIGN ENGINEER IS NECESSARY.

NOTES:

TO BE READ IN CONJUCTION WITH OTHER DRAWING SHEETS IN PS1 DRAWING SCHEDULE AND ARCHITECTURAL SPECIFICATION.

DESIGNER:

Brevity

Victoria Park Market,
Unit 72B
11 Deans Avenue
210 Victoria Street West
Auckland 1010

+64 9 216 7104
www.teambrevity.com

Tolerances (unless specified)	1-100	<1000	>1000
	± 2	± 10	± 70

All dim. in mm

Rev	Description
A	FOR CONSENT

Designed	BREVITY LTD	16/01/23
Drawn	BREVITY LTD	16/01/23

SUSPENDED CEILING SEISMIC DESIGN - SPECIFICATION, TWO-WAY GRID AND PLASTERBOARD CEILINGS

Scale: Do not Scale

DRG No. 050-00

NZS 1170.5 - Specification for Seismic Bracing of Suspended Ceilings

Project Details

Job Number:	23060268-01
Job Title:	Auckland - Generic NACCI System
Client:	NACCI Timber Systems
Job Revision:	A
Issue Date:	02/10/24

Building Parameters

Location:	Auckland
Structure Height:	20
Importance Level:	IL2
Design Working Life:	50 years
Site Subsoil Class:	C

Ceiling Specification Summary

Revision	Ceiling Description	Grid Type	Infill Type	Ceiling Height (m)	Plenum Height (mm)	Infill Mass (kg/m^2)	MT/TCR Max Spacing (mm)	Suspension (mm)	Ductility	Part Category	Seismic Action (G)	Max MT/TCR Length (m)	Perimeter Gap (mm)	SLS Wall Load (N/m)	ULS Wall Load (N/m)
A	5m x 5m (5kg/m2)	Rondo Keylock	Manual Input	10.00	1600	5	1200	1000	1.25	P2/P3	0.78	10.24	20	113	384
A	5m x 5m (15kg/m2)	Rondo Keylock	Manual Input	10.00	1600	15	1200	1000	1.25	P2/P3	0.78	5.12	20	226	769
A	5m x 5m (35kg/m2)	Rondo Keylock	Manual Input	10.00	1600	35	1200	600	1.25	P2/P3	0.78	2.56	40	0	0
A	5m x 5m (50kg/m2)	Rondo Keylock	Manual Input	10.00	1600	50	1200	600	1.25	P2/P3	0.78	1.86	40	0	0
A	10m x 5m (5kg/m2)	Rondo Keylock	Manual Input	10.00	1600	5	1200	1000	1.25	P2/P3	0.78	10.24	20	226	769
A	10m x 5m (15kg/m2)	Rondo Keylock	Manual Input	10.00	1600	15	1200	1000	1.25	P2/P3	0.78	5.12	40	226	769
A	10m x 5m (35kg/m2)	Rondo Keylock	Manual Input	10.00	1600	35	1200	600	1.25	P2/P3	0.78	2.56	40	0	0
A	10m x 5m (50kg/m2)	Rondo Keylock	Manual Input	10.00	1600	50	1200	600	1.25	P2/P3	0.78	1.86	40	0	0
A	10m x 10m (5kg/m2)	Rondo Keylock	Manual Input	10.00	1600	5	1200	1000	1.25	P2/P3	0.78	10.24	20	226	769
A	10m x 10m (15kg/m2)	Rondo Keylock	Manual Input	10.00	1600	15	1200	1000	1.25	P2/P3	0.78	5.12	40	0	0
A	10m x 10m (35kg/m2)	Rondo Keylock	Manual Input	10.00	1600	35	1200	600	1.25	P2/P3	0.78	2.56	40	0	0
A	10m x 10m (50kg/m2)	Rondo Keylock	Manual Input	10.00	1600	50	1200	600	1.25	P2/P3	0.78	1.86	40	0	0

C

Notes

MT: Main Tee of tile and grid ceiling system
CT: Cross Tee of tile and grid ceiling system
TCR: Top Cross Rail of concealed ceiling system
FC: Furring Channel of concealed ceiling system
Ceiling Height is measured from ground level
Plenum Height is distance from ceiling level to structure above
Additional service load of 3.0 kg/m^2 has been allowed for in seismic mass
2.5% Inter-story drift allowed for ULS movement

The maximum spacing for TCR is up to 1200 mm, while the brace spacing will remain the same.

C

NOT TO SCALE

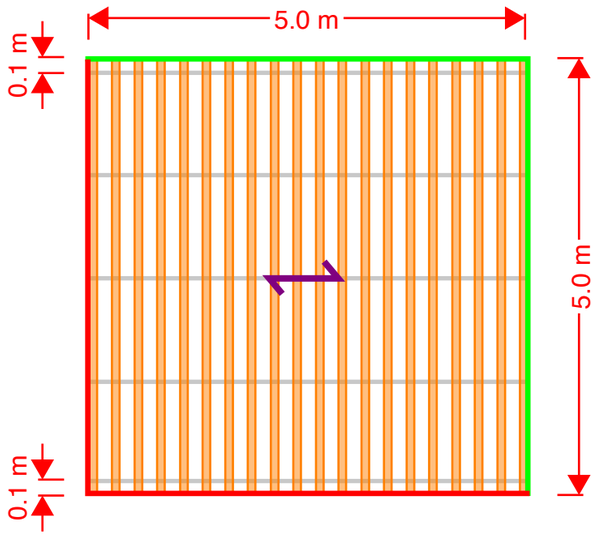

Standard 5m x 5m Room

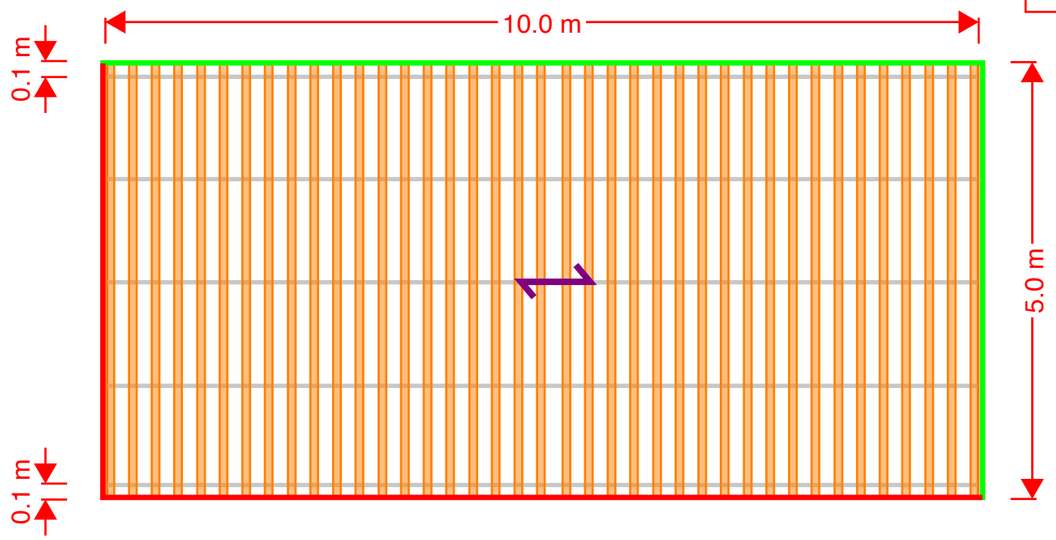

Standard 10m x 5m Room

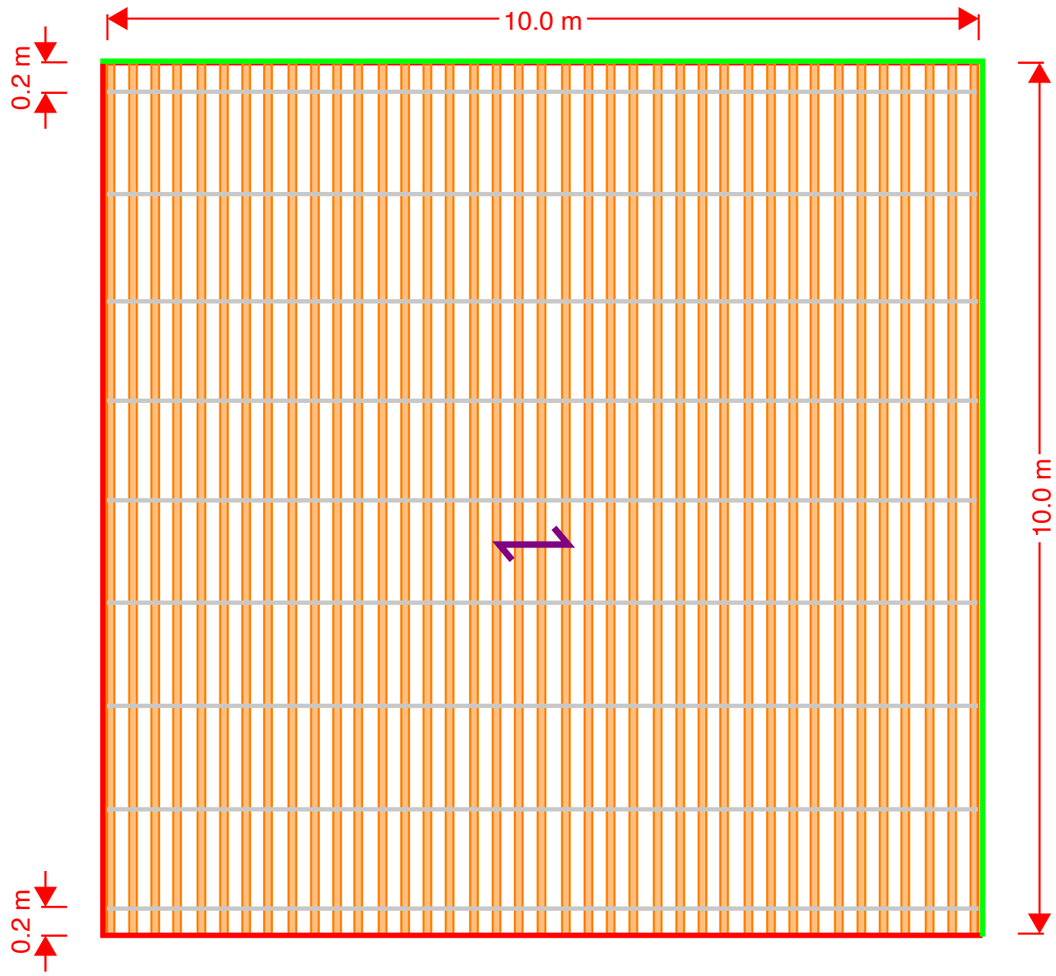

Standard 10m x 10m Room

BRACING LEGEND:

- TWO WAY BACK BRACE
- FIXED PERIMETER CONNECTION
- FLOATING PERIMETER CONNECTION (SEE SPEC)
- DIRECTION OF MAIN TEE OR TOP CROSS RAIL

TO ENSURE ADEQUATE CONSTRUCTION MONITORING IS CARRIED OUT, PLEASE CALL TEAM BREVITY ON +64 3 371 7593 AT LEAST FIVE BUSINESS DAYS PRIOR TO PROJECT CONSTRUCTION COMMENCEMENT.

NOTES:

1. REFER SPECIFICATION SHEET FOR CONTRACTOR AND INSTALLATION REQUIREMENTS.
2. ANY CHANGES ON SITE TO BE APPROVED BY BREVITY LTD.
3. SEE SPECIFICATION SHEET FOR REQUIRED PERIMETER GAP
4. SEE SPECIFICATION SHEET FOR REQUIRED SUSPENSION SPACING
5. MAXIMUM PLENUM HEIGHT TO BE 1600mm
6. ALL STANDARD ROOMS HAVE A TOP CROSS RAIL (TCR) SPACING OF 1200mm.
7. THE MAXIMUM SPACING FOR TCR IS UP TO 1200MM, WHILE THE BRACE SPACING WILL REMAIN THE SAME.

C

DESIGNER:

Brevity

Victoria Park Market,
Unit 72B,
210 Victoria Street West
Auckland 1010

+64 9 216 7104
www.teambrevity.com

Tolerances (unless specified)	1-100	<1000	>1000
	± 2	± 10	± 70

All dim. in mm

Rev	Description
A	FOR CONSENT
B	FOR CONSENT
C	FOR CONSENT

Designed	BREVITY LTD	30/10/24
Drawn	BREVITY LTD	30/10/24
Approved	BREVITY LTD	30/10/24

NACCI TIMBER SYSTEMS
SEISMIC BRACING LAYOUT - AUCKLAND - 5kg/m2

Scale: Do not Scale

DRG No. 23060268-01C

NOT TO SCALE

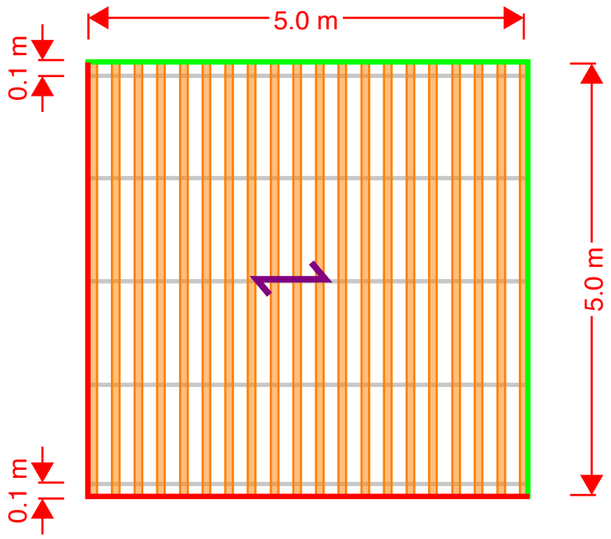

Standard 5m x 5m Room

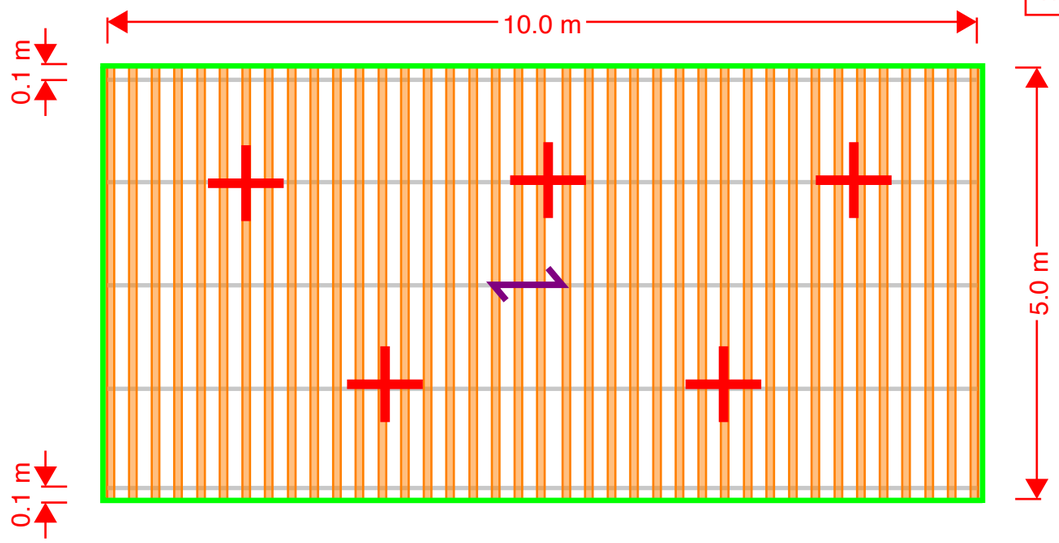

Standard 10m x 5m Room

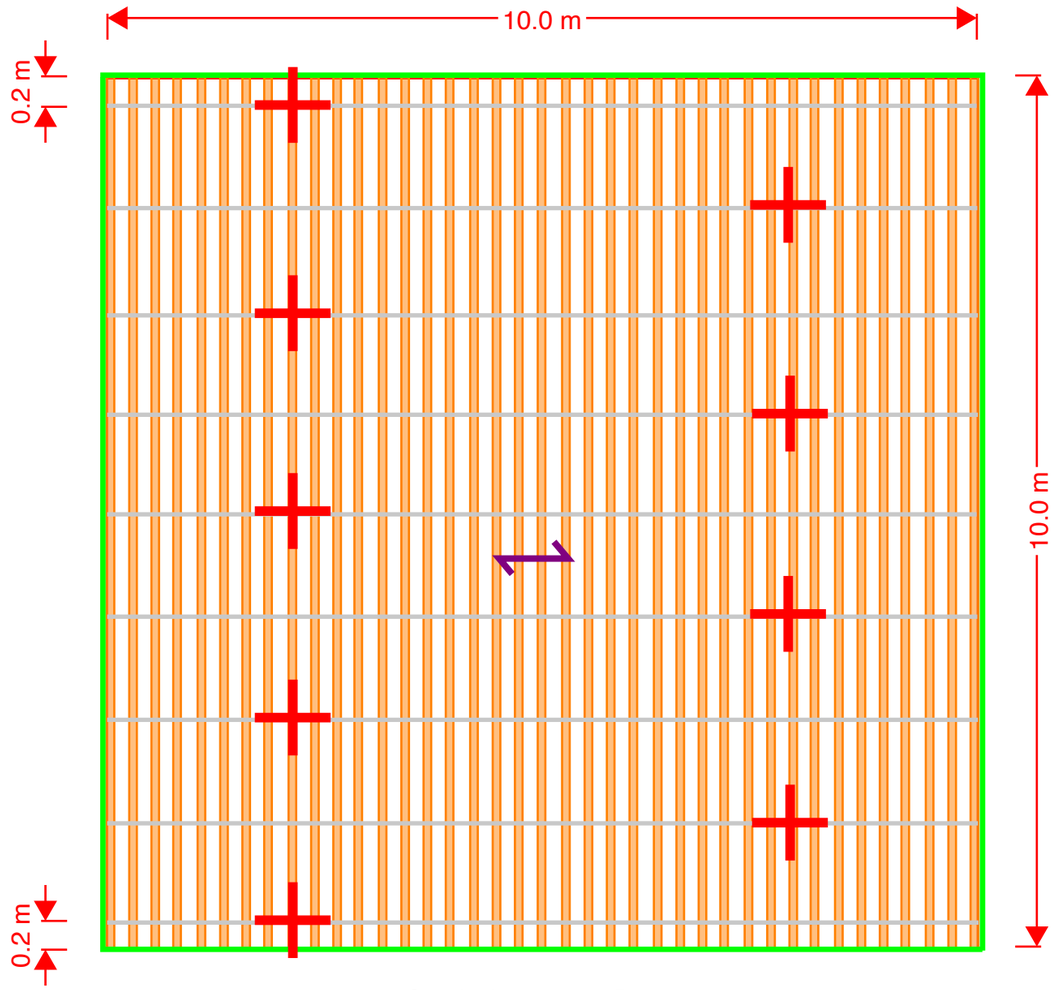

Standard 10m x 10m Room

BRACING LEGEND:

- TWO WAY BACK BRACE
- FIXED PERIMETER CONNECTION
- FLOATING PERIMETER CONNECTION (SEE SPEC)
- DIRECTION OF MAIN TEE OR TOP CROSS RAIL

TO ENSURE ADEQUATE CONSTRUCTION MONITORING IS CARRIED OUT, PLEASE CALL TEAM BREVITY ON +64 3 371 7593 AT LEAST FIVE BUSINESS DAYS PRIOR TO PROJECT CONSTRUCTION COMMENCEMENT.

NOTES:

1. REFER SPECIFICATION SHEET FOR CONTRACTOR AND INSTALLATION REQUIREMENTS.
2. ANY CHANGES ON SITE TO BE APPROVED BY BREVITY LTD.
3. SEE SPECIFICATION SHEET FOR REQUIRED PERIMETER GAP
4. SEE SPECIFICATION SHEET FOR REQUIRED SUSPENSION SPACING
5. MAXIMUM PLENUM HEIGHT TO BE 1600mm
6. ALL STANDARD ROOMS HAVE A TOP CROSS RAIL (TCR) SPACING OF 1200mm.
7. THE MAXIMUM SPACING FOR TCR IS UP TO 1200MM, WHILE THE BRACE SPACING WILL REMAIN THE SAME.

C

DESIGNER:

Brevity

Victoria Park Market,
Unit 72B,
210 Victoria Street West
Auckland 1010

+64 9 216 7104
www.teambrevity.com

Tolerances (unless specified)	1-100	<1000	>1000
	± 2	± 10	± 70

All dim. in mm

Rev	Description
A	FOR CONSENT
B	FOR CONSENT
C	FOR CONSENT

Designed	BREVITY LTD	30/10/24
Drawn	BREVITY LTD	30/10/24
Approved	BREVITY LTD	30/10/24

NACCI TIMBER SYSTEMS
SEISMIC BRACING LAYOUT - AUCKLAND - 15kg/m2

Scale: Do not Scale

DRG No. 23060268-01C

NOT TO SCALE

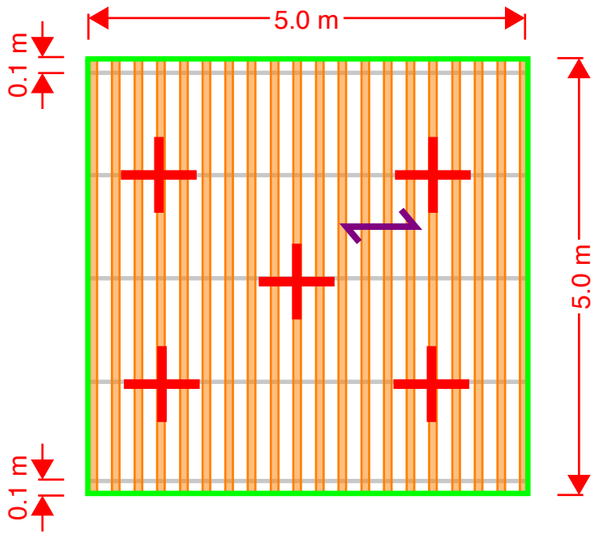

Standard 5m x 5m Room

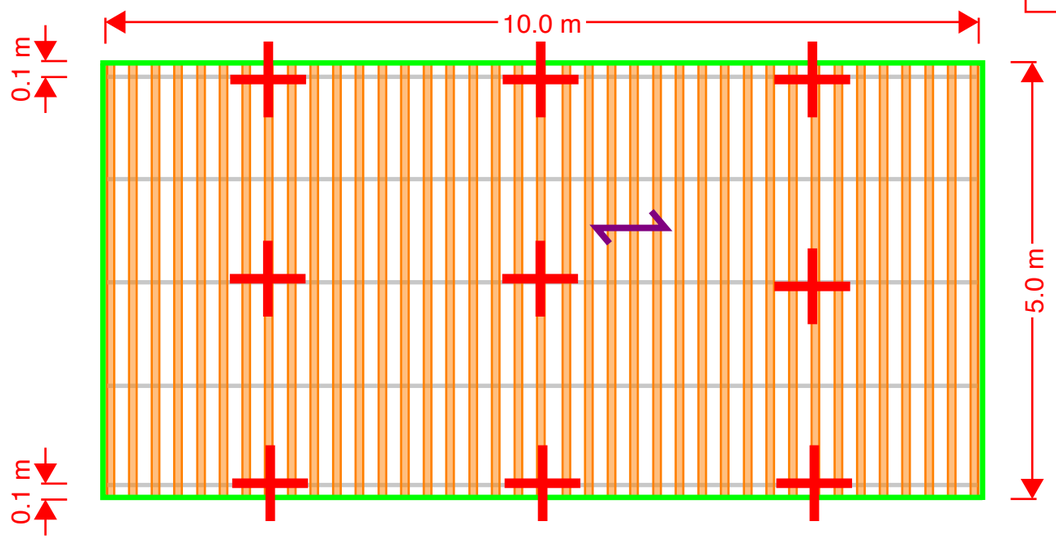

Standard 10m x 5m Room

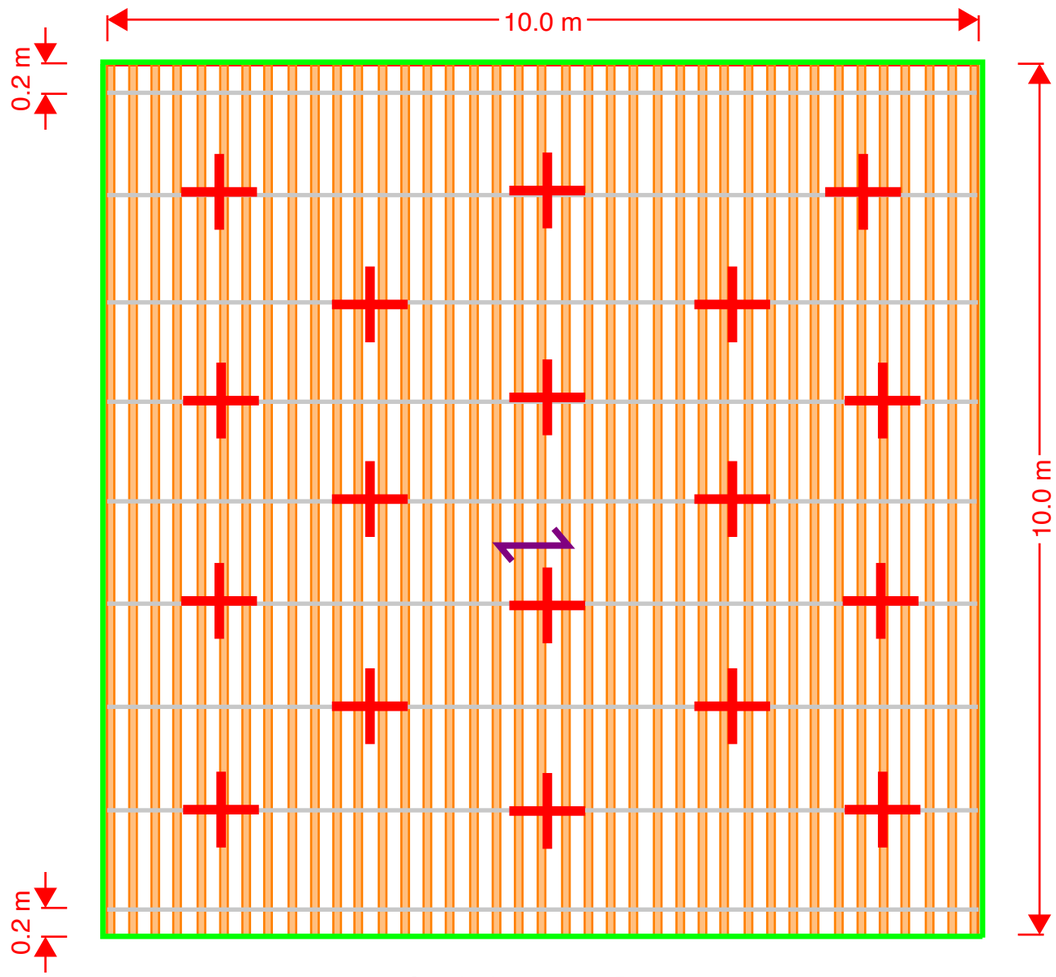

Standard 10m x 10m Room

BRACING LEGEND:

- TWO WAY BACK BRACE
- FIXED PERIMETER CONNECTION
- FLOATING PERIMETER CONNECTION (SEE SPEC)
- DIRECTION OF MAIN TEE OR TOP CROSS RAIL

TO ENSURE ADEQUATE CONSTRUCTION MONITORING IS CARRIED OUT, PLEASE CALL TEAM BREVITY ON +64 3 371 7593 AT LEAST FIVE BUSINESS DAYS PRIOR TO PROJECT CONSTRUCTION COMMENCEMENT.

NOTES:

1. REFER SPECIFICATION SHEET FOR CONTRACTOR AND INSTALLATION REQUIREMENTS.
2. ANY CHANGES ON SITE TO BE APPROVED BY BREVITY LTD.
3. SEE SPECIFICATION SHEET FOR REQUIRED PERIMETER GAP
4. SEE SPECIFICATION SHEET FOR REQUIRED SUSPENSION SPACING
5. MAXIMUM PLENUM HEIGHT TO BE 1600mm
6. ALL STANDARD ROOMS HAVE A TOP CROSS RAIL (TCR) SPACING OF 1200mm.
7. THE MAXIMUM SPACING FOR TCR IS UP TO 1200MM, WHILE THE BRACE SPACING WILL REMAIN THE SAME.

C

DESIGNER:

Brevity

Victoria Park Market,
Unit 72B,
210 Victoria Street West
Auckland 1010

+64 9 216 7104
www.teambrevity.com

Tolerances (unless specified)	1-100	<1000	>1000
	± 2	± 10	± 70

All dim. in mm

Rev	Description
A	FOR CONSENT
B	FOR CONSENT
C	FOR CONSENT

Designed	BREVITY LTD	30/10/24
Drawn	BREVITY LTD	30/10/24
Approved	BREVITY LTD	30/10/24

NACCI TIMBER SYSTEMS
SEISMIC BRACING LAYOUT - AUCKLAND - 35kg/m2

Scale: Do not Scale

DRG No. 23060268-01C

NOT TO SCALE

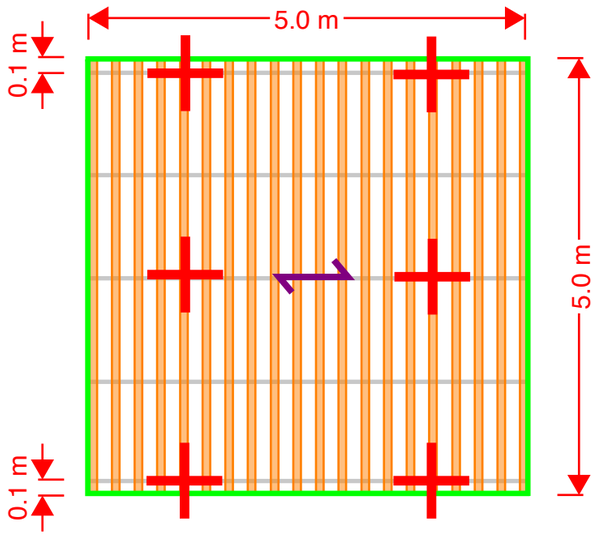

Standard 5m x 5m Room

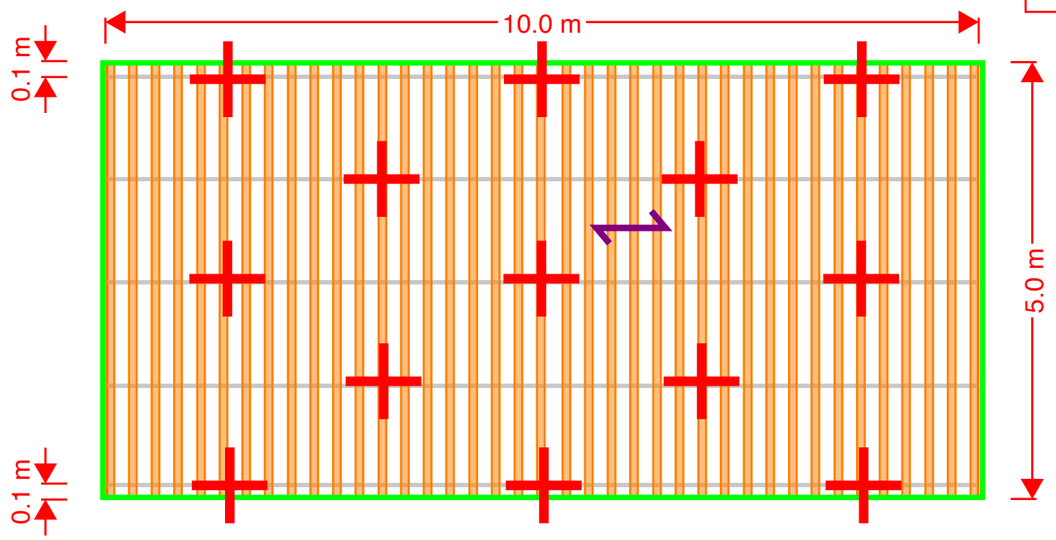

Standard 10m x 5m Room

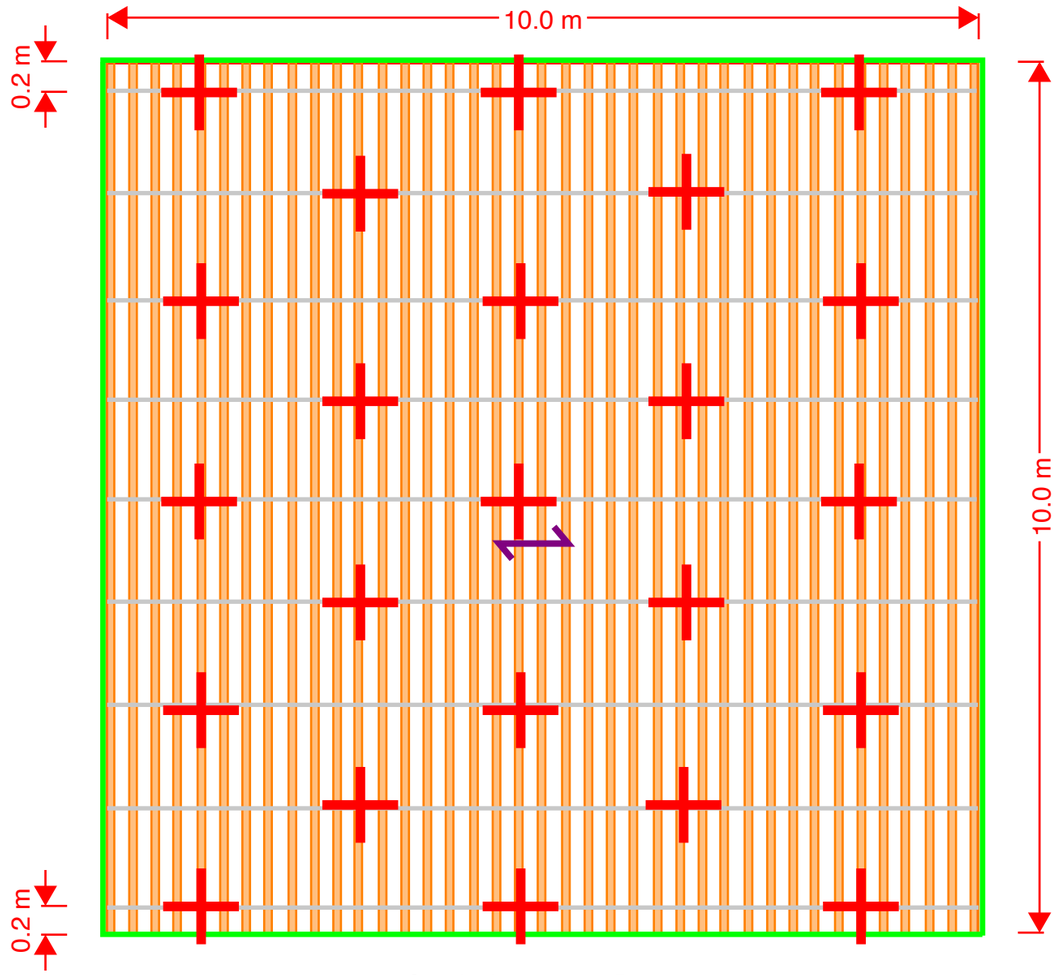

Standard 10m x 10m Room

BRACING LEGEND:

- TWO WAY BACK BRACE
- FIXED PERIMETER CONNECTION
- FLOATING PERIMETER CONNECTION (SEE SPEC)
- DIRECTION OF MAIN TEE OR TOP CROSS RAIL

TO ENSURE ADEQUATE CONSTRUCTION MONITORING IS CARRIED OUT, PLEASE CALL TEAM BREVITY ON +64 3 371 7593 AT LEAST FIVE BUSINESS DAYS PRIOR TO PROJECT CONSTRUCTION COMMENCEMENT.

NOTES:

1. REFER SPECIFICATION SHEET FOR CONTRACTOR AND INSTALLATION REQUIREMENTS.
2. ANY CHANGES ON SITE TO BE APPROVED BY BREVITY LTD.
3. SEE SPECIFICATION SHEET FOR REQUIRED PERIMETER GAP
4. SEE SPECIFICATION SHEET FOR REQUIRED SUSPENSION SPACING
5. MAXIMUM PLENUM HEIGHT TO BE 1600mm
6. ALL STANDARD ROOMS HAVE A TOP CROSS RAIL (TCR) SPACING OF 1200mm.
7. THE MAXIMUM SPACING FOR TCR IS UP TO 1200MM, WHILE THE BRACE SPACING WILL REMAIN THE SAME.

C

DESIGNER:

Brevity

Victoria Park Market,
Unit 72B,
210 Victoria Street West
Auckland 1010

+64 9 216 7104
www.teambrevity.com

Tolerances (unless specified)	1-100	<1000	>1000
	± 2	± 10	± 70

All dim. in mm

Rev	Description
A	FOR CONSENT
B	FOR CONSENT
C	FOR CONSENT

Designed	BREVITY LTD	30/10/24
Drawn	BREVITY LTD	30/10/24
Approved	BREVITY LTD	30/10/24

NACCI TIMBER SYSTEMS
SEISMIC BRACING LAYOUT - AUCKLAND - 50kg/m2

Scale: Do not Scale

DRG No. 23060268-01C

NZS 1170.5 - Specification for Seismic Bracing of Suspended Ceilings

Project Details

Job Number:	23060268-01
Job Title:	Tauranga - Generic NACCI System
Client:	NACCI Timber Systems
Job Revision:	A
Issue Date:	02/10/24

Building Parameters

Location:	Tauranga
Structure Height:	20
Importance Level:	IL2
Design Working Life:	50 years
Site Subsoil Class:	C

Ceiling Specification Summary

Revision	Ceiling Description	Grid Type	Infill Type	Ceiling Height (m)	Plenum Height (mm)	Infill Mass (kg/m^2)	MT/TCR Max Spacing (mm)	Suspension (mm)	Ductility	Part Category	Seismic Action (G)	Max MT/TCR Length (m)	Perimeter Gap (mm)	SLS Wall Load (N/m)	ULS Wall Load (N/m)
A	5m x 5m (5kg/m2)	Rondo Keylock	Manual Input	10.00	1600	5	1200	1000	1.25	P2/P3	1.21	6.65	20	174	591
A	5m x 5m (15kg/m2)	Rondo Keylock	Manual Input	10.00	1600	15	1200	1000	1.25	P2/P3	1.21	3.33	40	0	0
A	5m x 5m (35kg/m2)	Rondo Keylock	Manual Input	10.00	1600	35	1200	600	1.25	P2/P3	1.21	1.66	40	0	0
A	5m x 5m (50kg/m2)	Rondo Keylock	Manual Input	10.00	1600	50	1200	600	1.25	P2/P3	1.21	1.21	40	0	0
A	10m x 5m (5kg/m2)	Rondo Keylock	Manual Input	10.00	1600	5	1200	1000	1.25	P2/P3	1.21	6.65	40	174	591
A	10m x 5m (15kg/m2)	Rondo Keylock	Manual Input	10.00	1600	15	1200	1000	1.25	P2/P3	1.21	3.33	40	0	0
A	10m x 5m (35kg/m2)	Rondo Keylock	Manual Input	10.00	1600	35	1200	600	1.25	P2/P3	1.21	1.66	40	0	0
A	10m x 5m (50kg/m2)	Rondo Keylock	Manual Input	10.00	1600	50	1200	600	1.25	P2/P3	1.21	1.21	40	0	0
A	10m x 10m (5kg/m2)	Rondo Keylock	Manual Input	10.00	1600	5	1200	1000	1.25	P2/P3	1.21	6.65	40	0	0
A	10m x 10m (15kg/m2)	Rondo Keylock	Manual Input	10.00	1600	15	1200	1000	1.25	P2/P3	1.21	3.33	40	0	0
A	10m x 10m (35kg/m2)	Rondo Keylock	Manual Input	10.00	1600	35	1200	600	1.25	P2/P3	1.21	1.66	40	0	0
A	10m x 10m (50kg/m2)	Rondo Keylock	Manual Input	10.00	1600	50	1200	600	1.25	P2/P3	1.21	1.21	40	0	0

C

Notes

MT: Main Tee of tile and grid ceiling system
CT: Cross Tee of tile and grid ceiling system
TCR: Top Cross Rail of concealed ceiling system
FC: Furring Channel of concealed ceiling system
Ceiling Height is measured from ground level
Plenum Height is distance from ceiling level to structure above
Additional service load of 3.0 kg/m^2 has been allowed for in seismic mass
2.5% Inter-story drift allowed for ULS movement

The maximum spacing for TCR is up to 1200 mm, while the brace spacing will remain the same.

C

NOT TO SCALE

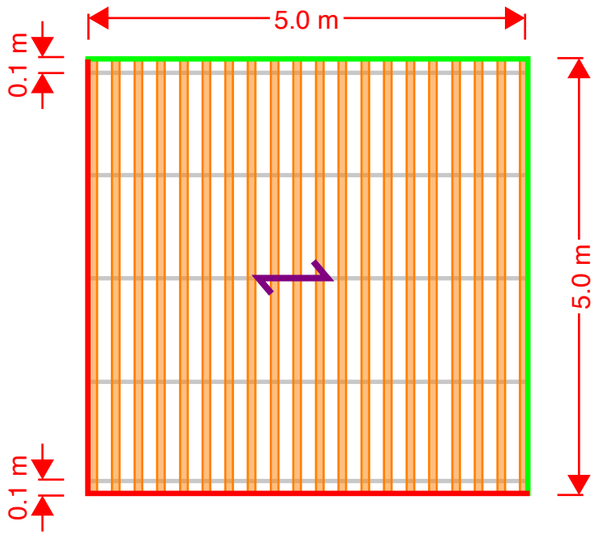

Standard 5m x 5m Room

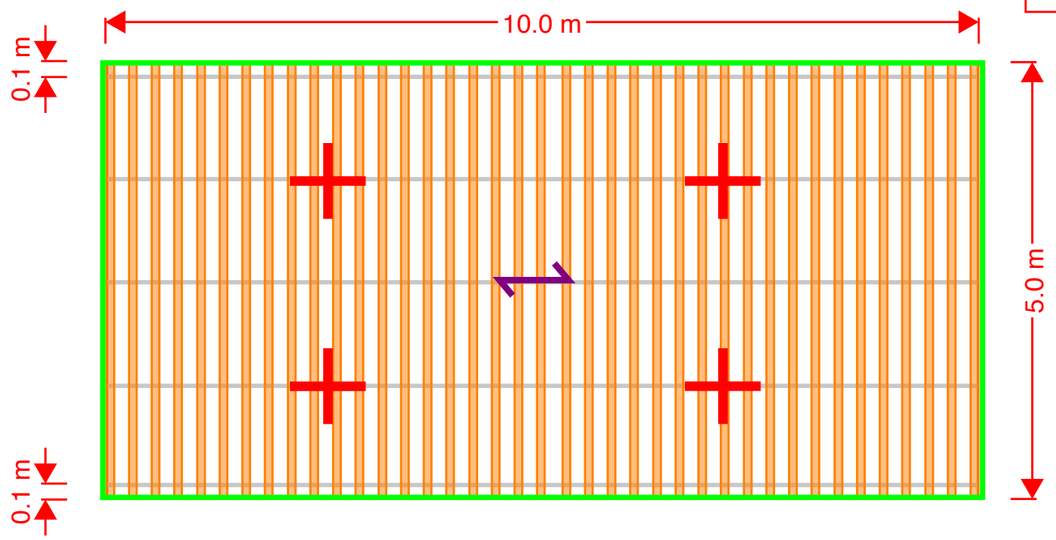

Standard 10m x 5m Room

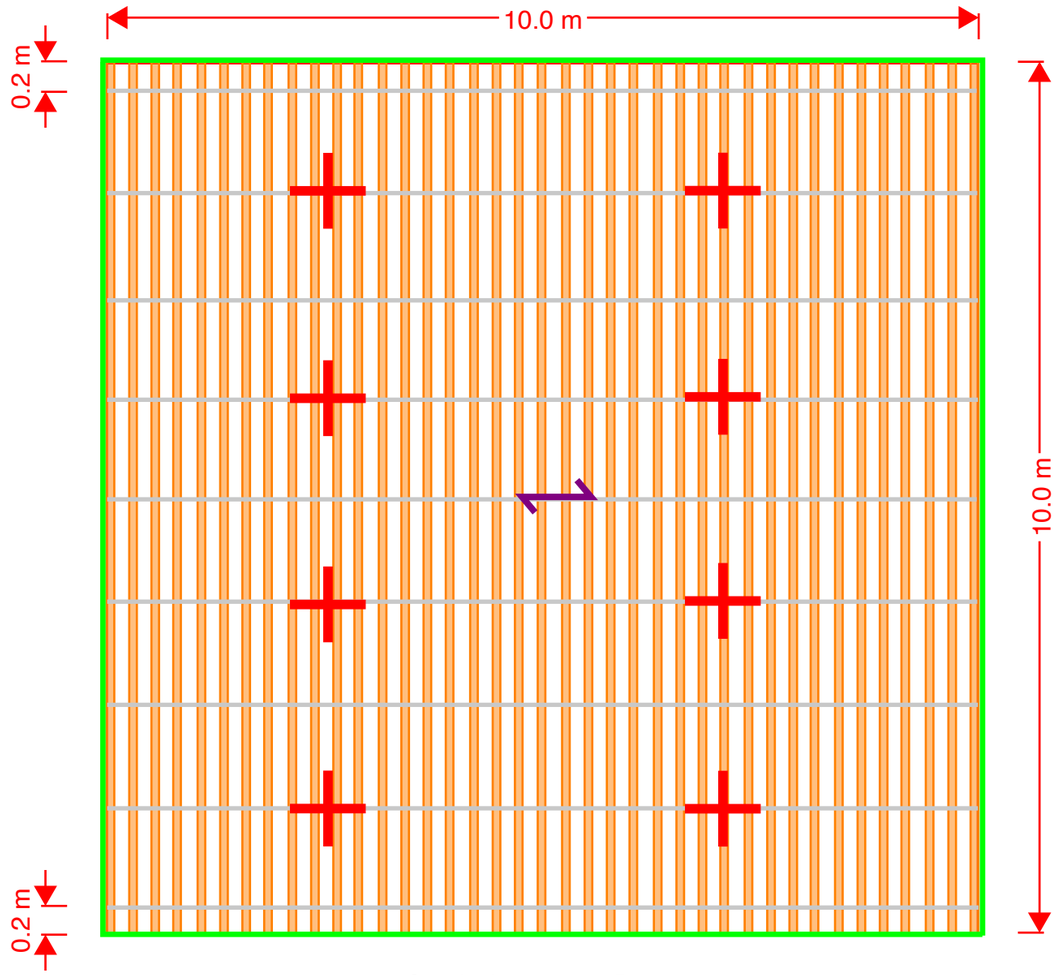

Standard 10m x 10m Room

BRACING LEGEND:

- TWO WAY BACK BRACE
- FIXED PERIMETER CONNECTION
- FLOATING PERIMETER CONNECTION (SEE SPEC)
- DIRECTION OF MAIN TEE OR TOP CROSS RAIL

TO ENSURE ADEQUATE CONSTRUCTION MONITORING IS CARRIED OUT, PLEASE CALL TEAM BREVITY ON +64 3 371 7593 AT LEAST FIVE BUSINESS DAYS PRIOR TO PROJECT CONSTRUCTION COMMENCEMENT.

NOTES:

1. REFER SPECIFICATION SHEET FOR CONTRACTOR AND INSTALLATION REQUIREMENTS.
2. ANY CHANGES ON SITE TO BE APPROVED BY BREVITY LTD.
3. SEE SPECIFICATION SHEET FOR REQUIRED PERIMETER GAP
4. SEE SPECIFICATION SHEET FOR REQUIRED SUSPENSION SPACING
5. MAXIMUM PLENUM HEIGHT TO BE 1600mm
6. ALL STANDARD ROOMS HAVE A TOP CROSS RAIL (TCR) SPACING OF 1200mm.
7. THE MAXIMUM SPACING FOR TCR IS UP TO 1200MM, WHILE THE BRACE SPACING WILL REMAIN THE SAME.

C

DESIGNER:

Brevity

Victoria Park Market,
Unit 72B,
210 Victoria Street West
Auckland 1010

+64 9 216 7104
www.teambrevity.com

Tolerances (unless specified)	1-100	<1000	>1000
	± 2	± 10	± 70

All dim. in mm

Rev	Description
A	FOR CONSENT
B	FOR CONSENT
C	FOR CONSENT

Designed	BREVITY LTD	30/10/24
Drawn	BREVITY LTD	30/10/24
Approved	BREVITY LTD	30/10/24

NACCI TIMBER SYSTEMS
SEISMIC BRACING LAYOUT - TAURANGA - 5kg/m2

Scale: Do not Scale

DRG No. 23060268-01C

NOT TO SCALE

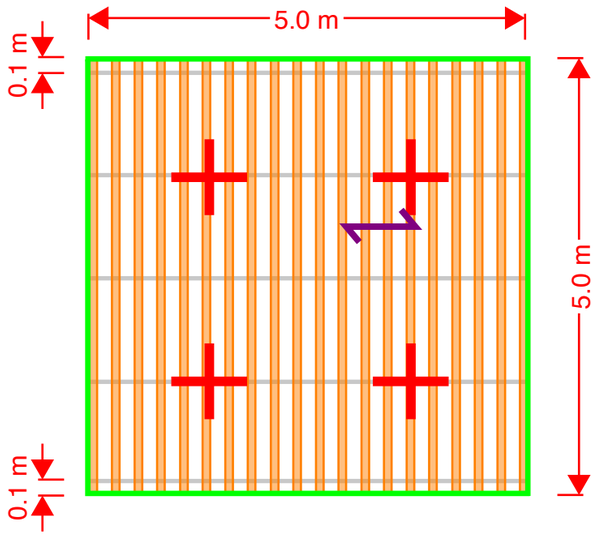

Standard 5m x 5m Room

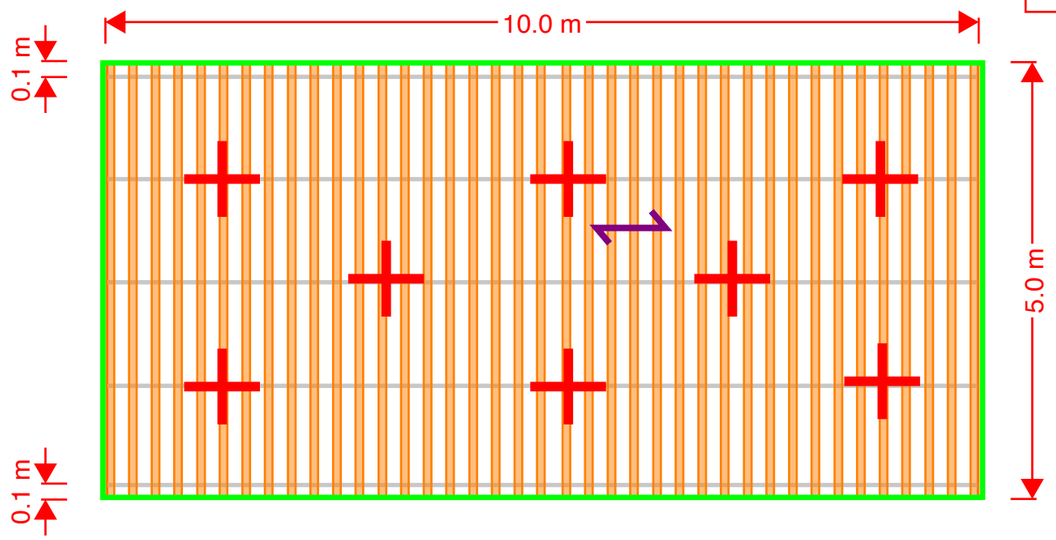

Standard 10m x 5m Room

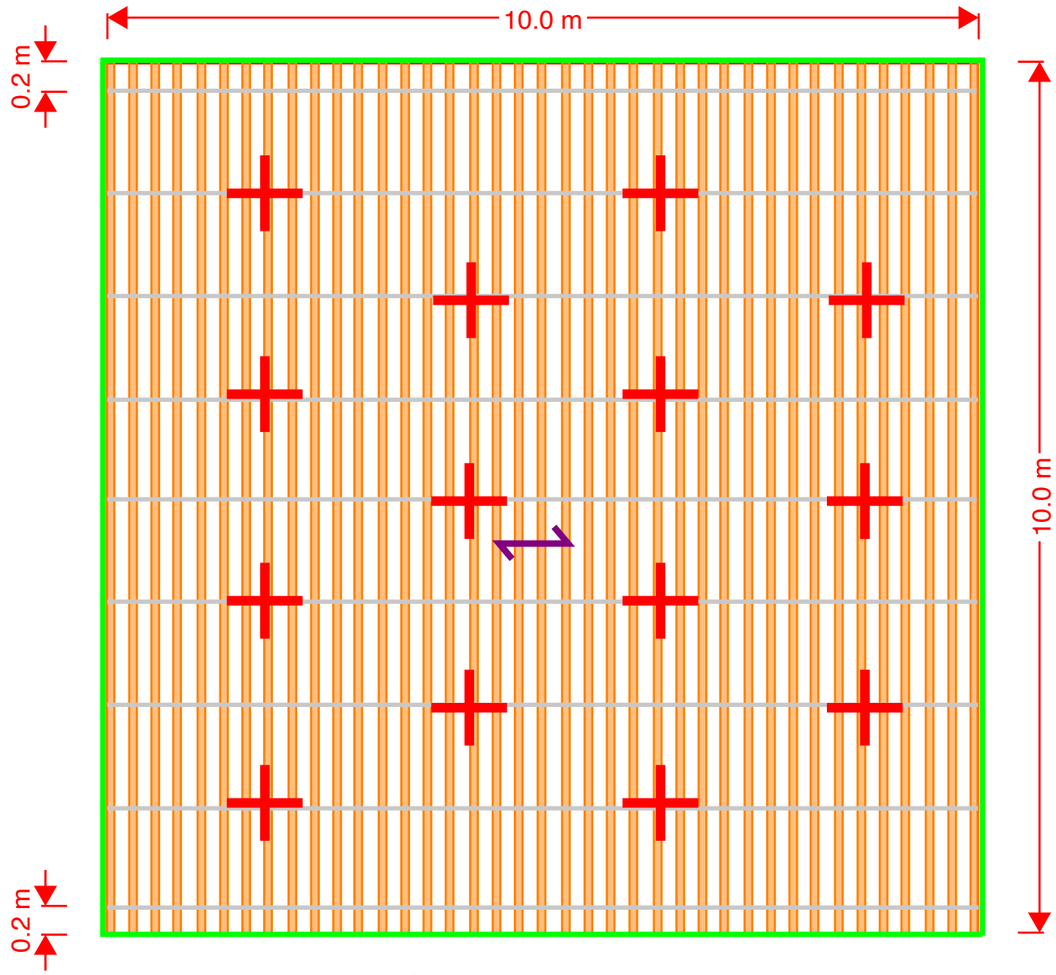

Standard 10m x 10m Room

BRACING LEGEND:

- TWO WAY BACK BRACE
- FIXED PERIMETER CONNECTION
- FLOATING PERIMETER CONNECTION (SEE SPEC)
- DIRECTION OF MAIN TEE OR TOP CROSS RAIL

TO ENSURE ADEQUATE CONSTRUCTION MONITORING IS CARRIED OUT, PLEASE CALL TEAM BREVITY ON +64 3 371 7593 AT LEAST FIVE BUSINESS DAYS PRIOR TO PROJECT CONSTRUCTION COMMENCEMENT.

NOTES:

1. REFER SPECIFICATION SHEET FOR CONTRACTOR AND INSTALLATION REQUIREMENTS.
2. ANY CHANGES ON SITE TO BE APPROVED BY BREVITY LTD.
3. SEE SPECIFICATION SHEET FOR REQUIRED PERIMETER GAP
4. SEE SPECIFICATION SHEET FOR REQUIRED SUSPENSION SPACING
5. MAXIMUM PLENUM HEIGHT TO BE 1600mm
6. ALL STANDARD ROOMS HAVE A TOP CROSS RAIL (TCR) SPACING OF 1200mm.
7. THE MAXIMUM SPACING FOR TCR IS UP TO 1200MM, WHILE THE BRACE SPACING WILL REMAIN THE SAME.

C

DESIGNER:

Brevity

Victoria Park Market,
Unit 72B,
210 Victoria Street West
Auckland 1010

+64 9 216 7104
www.teambrevity.com

Tolerances (unless specified)	1-100	<1000	>1000
	± 2	± 10	± 70

All dim. in mm

Rev	Description
A	FOR CONSENT
B	FOR CONSENT
C	FOR CONSENT

Designed	BREVITY LTD	30/10/24
Drawn	BREVITY LTD	30/10/24
Approved	BREVITY LTD	30/10/24

NACCI TIMBER SYSTEMS
SEISMIC BRACING LAYOUT - TAURANGA - 15kg/m2

Scale: Do not Scale

DRG No. 23060268-01C

NOT TO SCALE

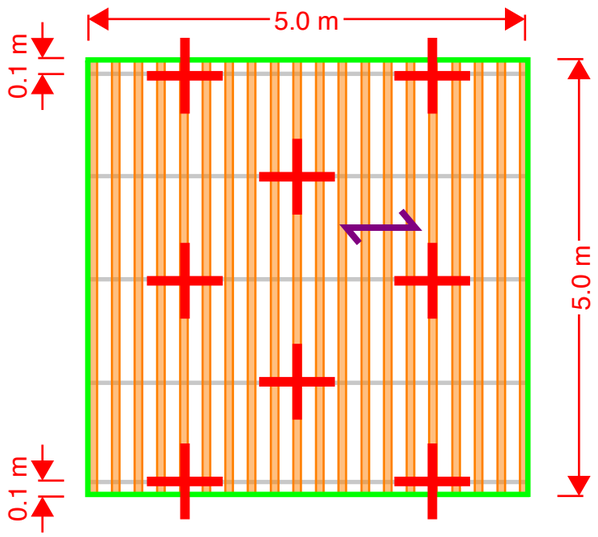

Standard 5m x 5m Room

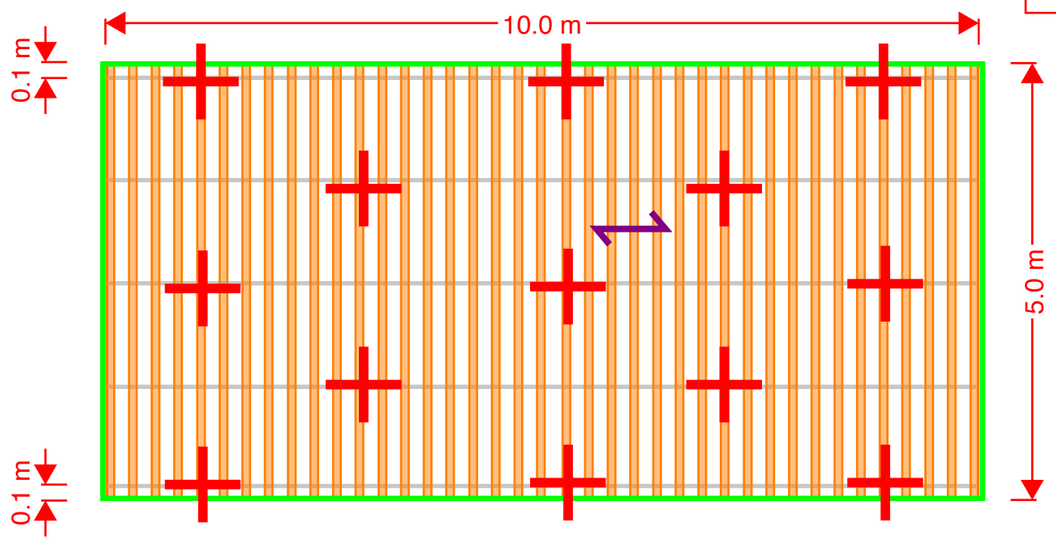

Standard 10m x 5m Room

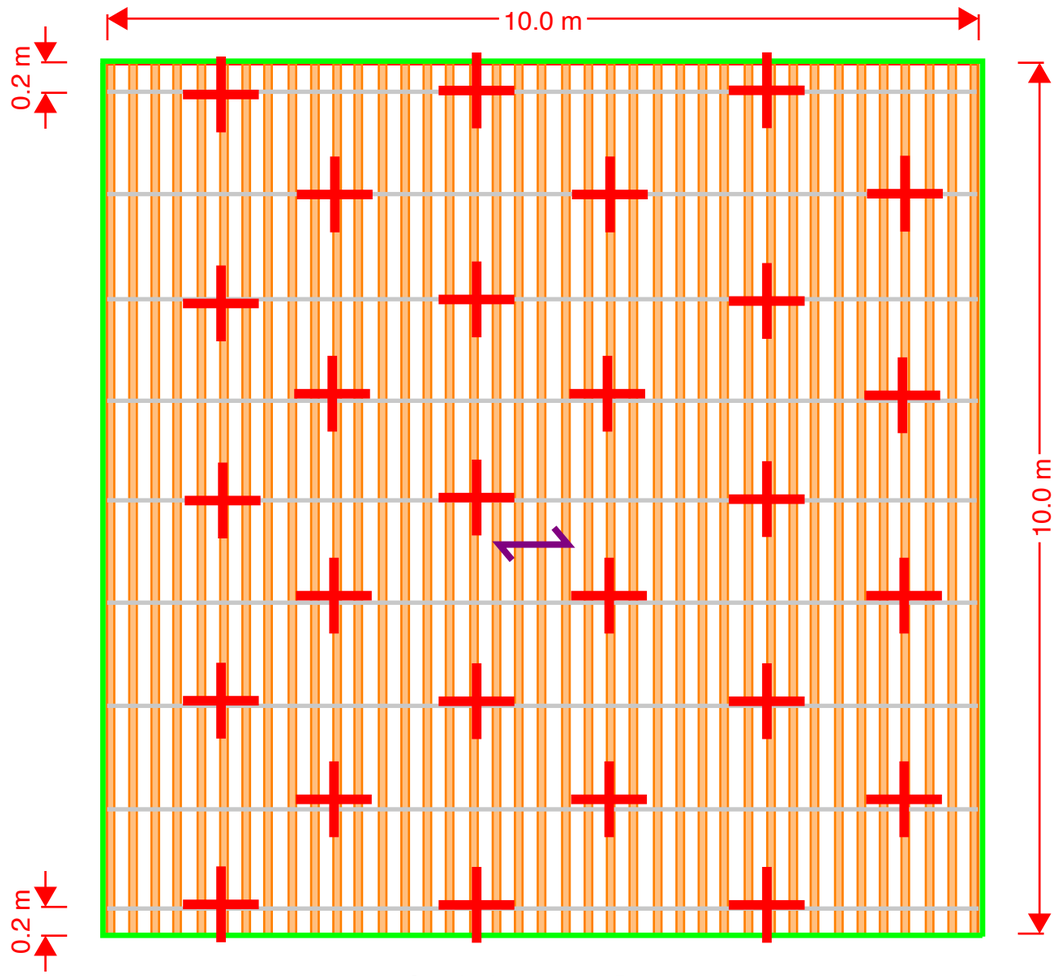

Standard 10m x 10m Room

BRACING LEGEND:

- TWO WAY BACK BRACE
- FIXED PERIMETER CONNECTION
- FLOATING PERIMETER CONNECTION (SEE SPEC)
- DIRECTION OF MAIN TEE OR TOP CROSS RAIL

TO ENSURE ADEQUATE CONSTRUCTION MONITORING IS CARRIED OUT, PLEASE CALL TEAM BREVITY ON +64 3 371 7593 AT LEAST FIVE BUSINESS DAYS PRIOR TO PROJECT CONSTRUCTION COMMENCEMENT.

NOTES:

1. REFER SPECIFICATION SHEET FOR CONTRACTOR AND INSTALLATION REQUIREMENTS.
2. ANY CHANGES ON SITE TO BE APPROVED BY BREVITY LTD.
3. SEE SPECIFICATION SHEET FOR REQUIRED PERIMETER GAP
4. SEE SPECIFICATION SHEET FOR REQUIRED SUSPENSION SPACING
5. MAXIMUM PLENUM HEIGHT TO BE 1600mm
6. ALL STANDARD ROOMS HAVE A TOP CROSS RAIL (TCR) SPACING OF 1200mm.
7. THE MAXIMUM SPACING FOR TCR IS UP TO 1200MM, WHILE THE BRACE SPACING WILL REMAIN THE SAME.

C

DESIGNER:

Brevity

Victoria Park Market,
Unit 72B,
210 Victoria Street West
Auckland 1010

+64 9 216 7104
www.teambrevity.com

Tolerances (unless specified)	1-100	<1000	>1000
	± 2	± 10	± 70

All dim. in mm

Rev	Description
A	FOR CONSENT
B	FOR CONSENT
C	FOR CONSENT

Designed	BREVITY LTD	30/10/24
Drawn	BREVITY LTD	30/10/24
Approved	BREVITY LTD	30/10/24

NACCI TIMBER SYSTEMS
SEISMIC BRACING LAYOUT - TAURANGA - 35kg/m2

Scale: Do not Scale

DRG No. 23060268-01C

NOT TO SCALE

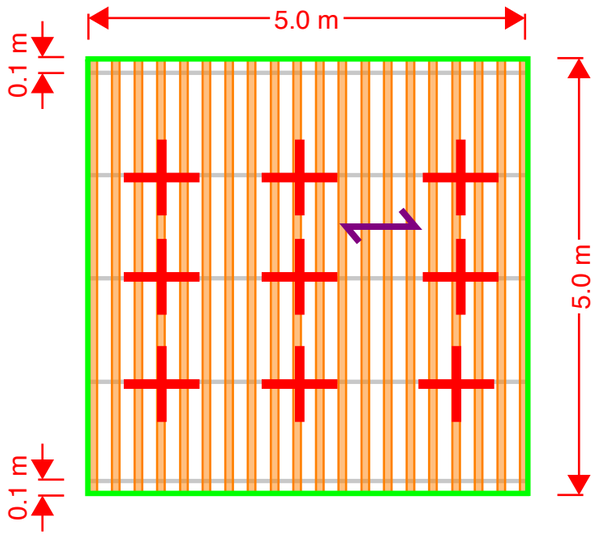

Standard 5m x 5m Room

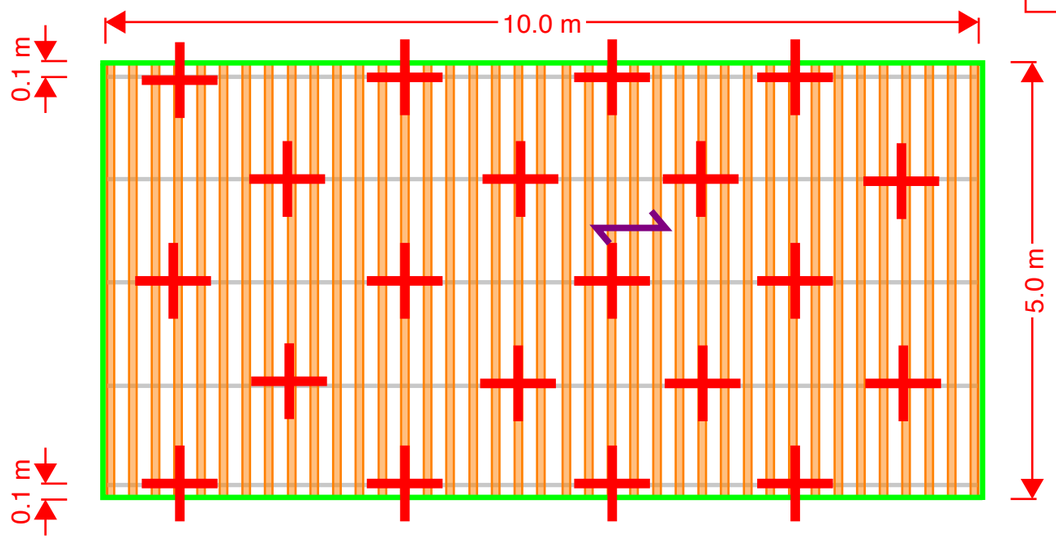

Standard 10m x 5m Room

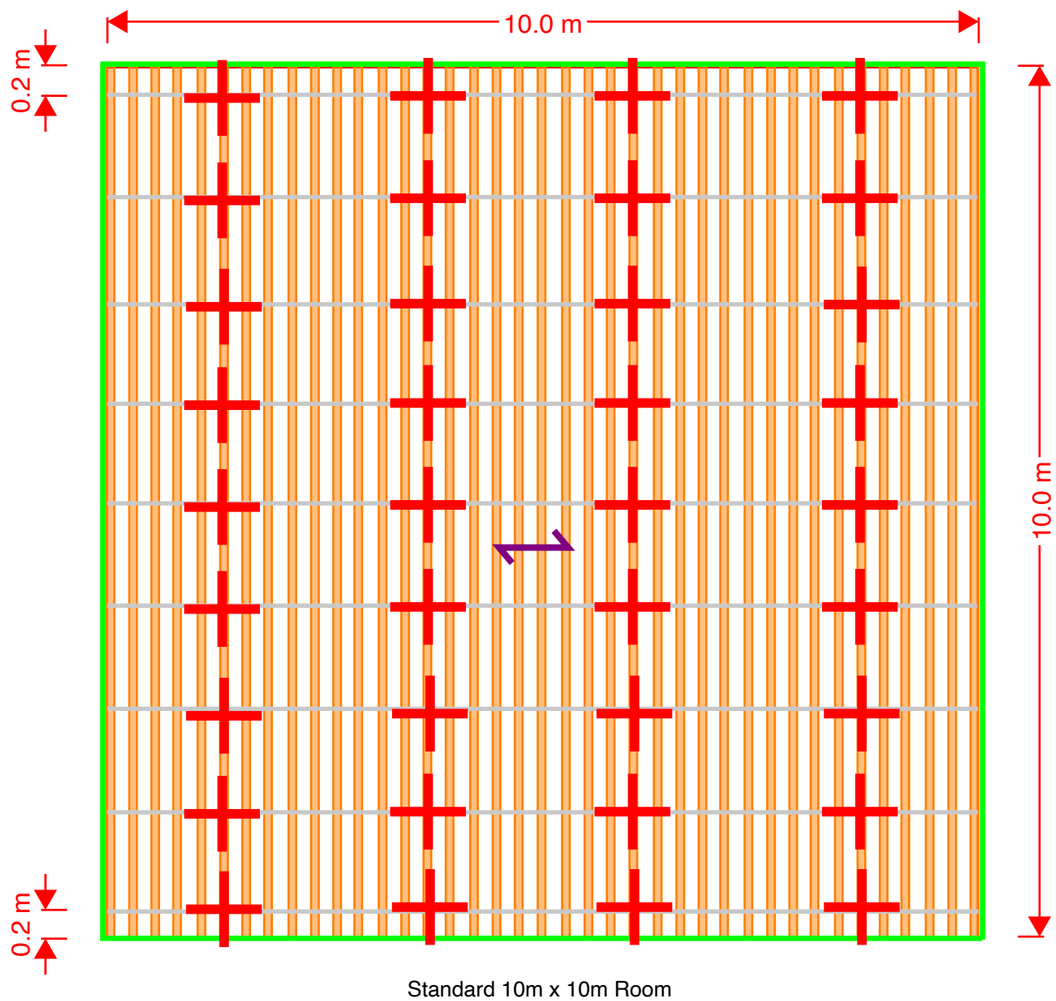

Standard 10m x 10m Room

BRACING LEGEND:

- TWO WAY BACK BRACE
- FIXED PERIMETER CONNECTION
- FLOATING PERIMETER CONNECTION (SEE SPEC)
- DIRECTION OF MAIN TEE OR TOP CROSS RAIL

TO ENSURE ADEQUATE CONSTRUCTION MONITORING IS CARRIED OUT, PLEASE CALL TEAM BREVITY ON +64 3 371 7593 AT LEAST FIVE BUSINESS DAYS PRIOR TO PROJECT CONSTRUCTION COMMENCEMENT.

NOTES:

1. REFER SPECIFICATION SHEET FOR CONTRACTOR AND INSTALLATION REQUIREMENTS.
2. ANY CHANGES ON SITE TO BE APPROVED BY BREVITY LTD.
3. SEE SPECIFICATION SHEET FOR REQUIRED PERIMETER GAP
4. SEE SPECIFICATION SHEET FOR REQUIRED SUSPENSION SPACING
5. MAXIMUM PLENUM HEIGHT TO BE 1600mm
6. ALL STANDARD ROOMS HAVE A TOP CROSS RAIL (TCR) SPACING OF 1200mm.
7. THE MAXIMUM SPACING FOR TCR IS UP TO 1200MM, WHILE THE BRACE SPACING WILL REMAIN THE SAME.

C

DESIGNER:

Brevity

Victoria Park Market,
Unit 72B,
210 Victoria Street West
Auckland 1010

+64 9 216 7104
www.teambrevity.com

Tolerances (unless specified)	1-100	<1000	>1000
	± 2	± 10	± 70

All dim. in mm

Rev	Description
A	FOR CONSENT
B	FOR CONSENT
C	FOR CONSENT

Designed	BREVITY LTD	30/10/24
Drawn	BREVITY LTD	30/10/24
Approved	BREVITY LTD	30/10/24

NACCI TIMBER SYSTEMS
SEISMIC BRACING LAYOUT - TAURANGA - 50kg/m2

Scale: Do not Scale

DRG No. 23060268-01C

NZS 1170.5 - Specification for Seismic Bracing of Suspended Ceilings

Project Details

Job Number:	23060268-01
Job Title:	Wellington - Generic NACCI System
Client:	NACCI Timber Systems
Job Revision:	A
Issue Date:	02/10/24

Building Parameters

Location:	Wellington
Structure Height:	20
Importance Level:	IL2
Design Working Life:	50 years
Site Subsoil Class:	C

Ceiling Specification Summary

Revision	Ceiling Description	Grid Type	Infill Type	Ceiling Height (m)	Plenum Height (mm)	Infill Mass (kg/m^2)	MT/TCR Max Spacing (mm)	Suspension (mm)	Ductility	Part Category	Seismic Action (G)	Max MT/TCR Length (m)	Perimeter Gap (mm)	SLS Wall Load (N/m)	ULS Wall Load (N/m)
A	5m x 5m (5kg/m2)	Rondo Keylock	Manual Input	10.00	1600	5	1200	1000	1.25	P2/P3	2.41	3.33	40	0	0
A	5m x 5m (15kg/m2)	Rondo Keylock	Manual Input	10.00	1600	15	1200	1000	1.25	P2/P3	2.41	1.66	40	0	0
A	5m x 5m (35kg/m2)	Rondo Keylock	Manual Input	10.00	1600	35	1200	600	1.25	P2/P3	2.41	0.83	40	0	0
A	5m x 5m (50kg/m2)	Rondo Keylock	Manual Input	10.00	1600	50	1200	600	1.25	P2/P3	2.41	0.60	40	0	0
A	10m x 5m (5kg/m2)	Rondo Keylock	Manual Input	10.00	1600	5	1200	1000	1.25	P2/P3	2.41	3.33	40	0	0
A	10m x 5m (15kg/m2)	Rondo Keylock	Manual Input	10.00	1600	15	1200	1000	1.25	P2/P3	2.41	1.66	40	0	0
A	10m x 5m (35kg/m2)	Rondo Keylock	Manual Input	10.00	1600	35	1200	600	1.25	P2/P3	2.41	0.83	40	0	0
A	10m x 5m (50kg/m2)	Rondo Keylock	Manual Input	10.00	1600	50	1200	600	1.25	P2/P3	2.41	0.60	40	0	0
A	10m x 10m (5kg/m2)	Rondo Keylock	Manual Input	10.00	1600	5	1200	1000	1.25	P2/P3	2.41	3.33	40	0	0
A	10m x 10m (15kg/m2)	Rondo Keylock	Manual Input	10.00	1600	15	1200	1000	1.25	P2/P3	2.41	1.66	40	0	0
A	10m x 10m (35kg/m2)	Rondo Keylock	Manual Input	10.00	1600	35	1200	600	1.25	P2/P3	2.41	0.83	40	0	0
A	10m x 10m (50kg/m2)	Rondo Keylock	Manual Input	10.00	1600	50	1200	600	1.25	P2/P3	2.41	0.60	40	0	0

C

Notes

MT: Main Tee of tile and grid ceiling system
CT: Cross Tee of tile and grid ceiling system
TCR: Top Cross Rail of concealed ceiling system
FC: Furring Channel of concealed ceiling system
Ceiling Height is measured from ground level
Plenum Height is distance from ceiling level to structure above
Additional service load of 3.0 kg/m^2 has been allowed for in seismic mass
2.5% Inter-story drift allowed for ULS movement

The maximum spacing for TCR is up to 1200 mm, while the brace spacing will remain the same.

C

NOT TO SCALE

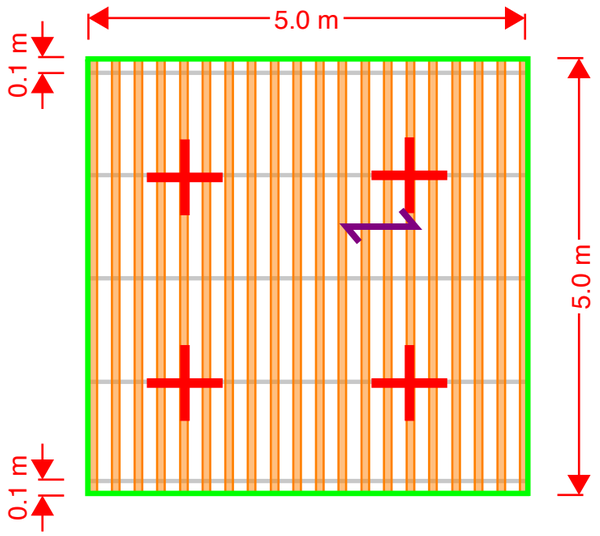

Standard 5m x 5m Room

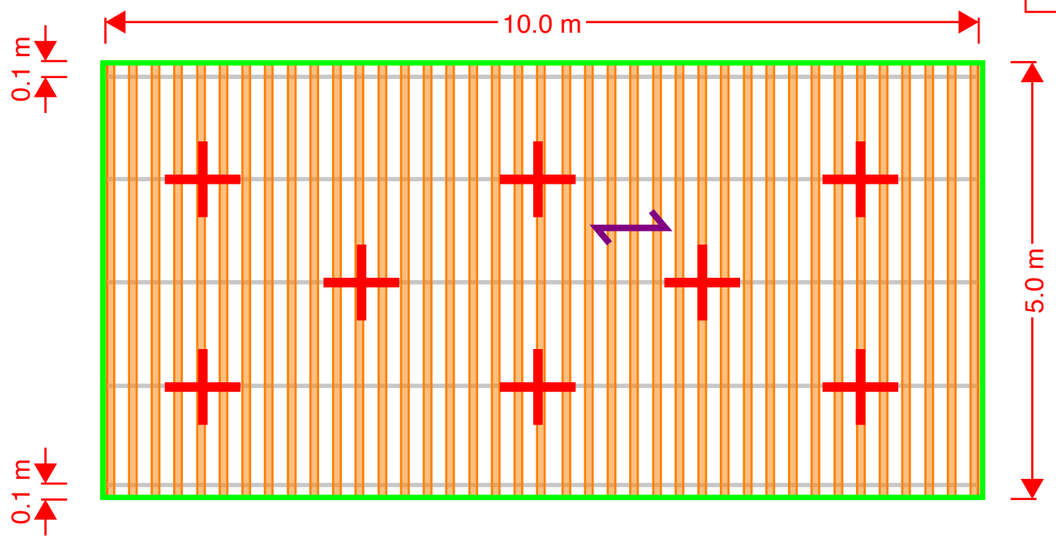

Standard 10m x 5m Room

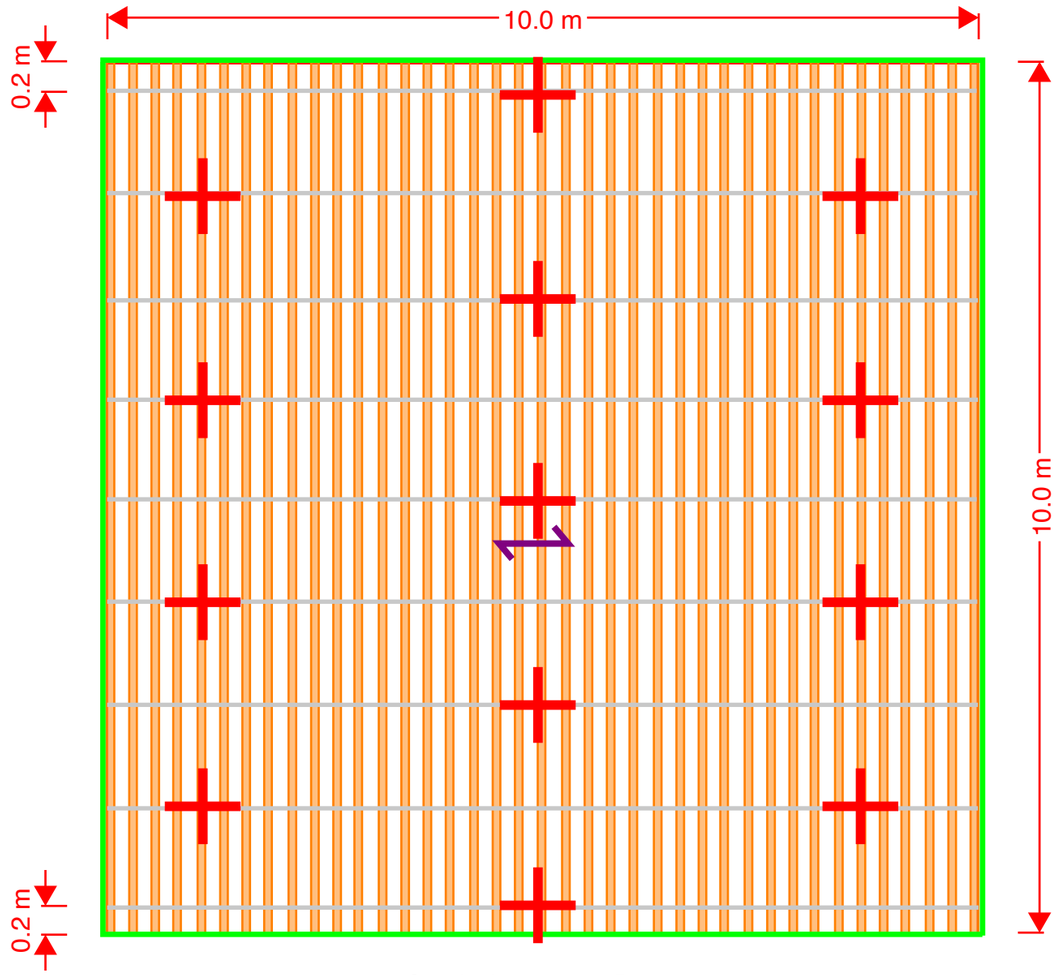

Standard 10m x 10m Room

BRACING LEGEND:

- TWO WAY BACK BRACE
- FIXED PERIMETER CONNECTION
- FLOATING PERIMETER CONNECTION (SEE SPEC)
- DIRECTION OF MAIN TEE OR TOP CROSS RAIL

TO ENSURE ADEQUATE CONSTRUCTION MONITORING IS CARRIED OUT, PLEASE CALL TEAM BREVITY ON +64 3 371 7593 AT LEAST FIVE BUSINESS DAYS PRIOR TO PROJECT CONSTRUCTION COMMENCEMENT.

NOTES:

1. REFER SPECIFICATION SHEET FOR CONTRACTOR AND INSTALLATION REQUIREMENTS.
2. ANY CHANGES ON SITE TO BE APPROVED BY BREVITY LTD.
3. SEE SPECIFICATION SHEET FOR REQUIRED PERIMETER GAP
4. SEE SPECIFICATION SHEET FOR REQUIRED SUSPENSION SPACING
5. MAXIMUM PLENUM HEIGHT TO BE 1600mm
6. ALL STANDARD ROOMS HAVE A TOP CROSS RAIL (TCR) SPACING OF 1200mm.
7. THE MAXIMUM SPACING FOR TCR IS UP TO 1200MM, WHILE THE BRACE SPACING WILL REMAIN THE SAME.

C

DESIGNER:

Brevity

Victoria Park Market,
Unit 72B,
210 Victoria Street West
Auckland 1010

+64 9 216 7104
www.teambrevity.com

Tolerances (unless specified)	1-100	<1000	>1000
	± 2	± 10	± 70

All dim. in mm

Rev	Description
A	FOR CONSENT
B	FOR CONSENT
C	FOR CONSENT

Designed	BREVITY LTD	30/10/24
Drawn	BREVITY LTD	30/10/24
Approved	BREVITY LTD	30/10/24

NACCI TIMBER SYSTEMS
SEISMIC BRACING LAYOUT - WELLINGTON - 5kg/m2

Scale: Do not Scale

DRG No. 23060268-01C

NOT TO SCALE

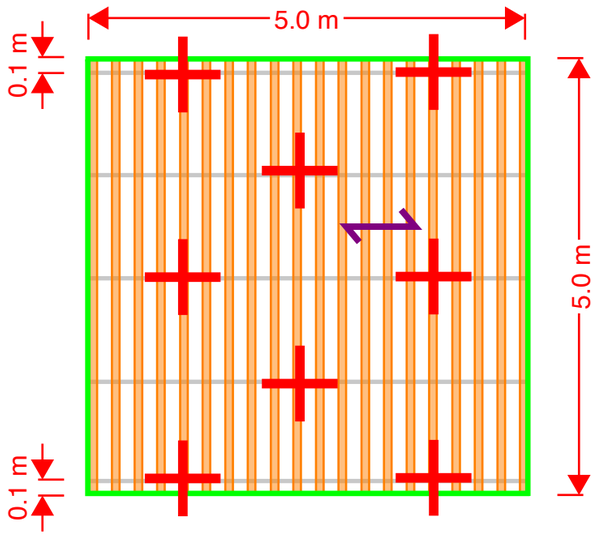

Standard 5m x 5m Room

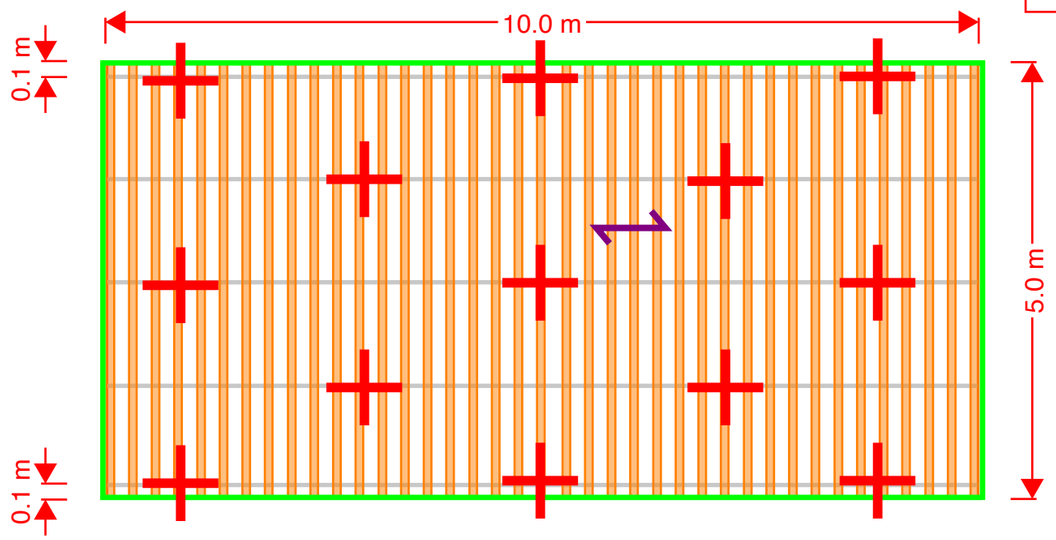

Standard 10m x 5m Room

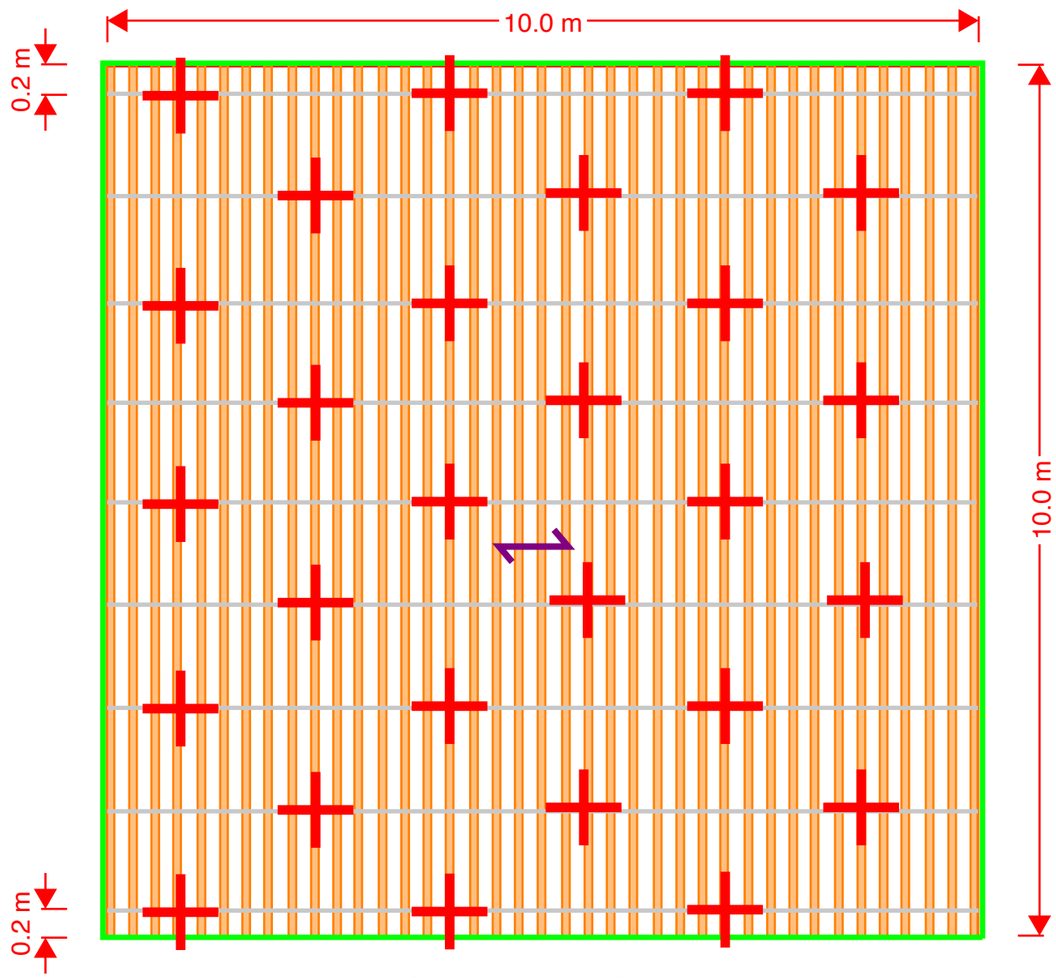

Standard 10m x 10m Room

BRACING LEGEND:

- TWO WAY BACK BRACE
- FIXED PERIMETER CONNECTION
- FLOATING PERIMETER CONNECTION (SEE SPEC)
- DIRECTION OF MAIN TEE OR TOP CROSS RAIL

TO ENSURE ADEQUATE CONSTRUCTION MONITORING IS CARRIED OUT, PLEASE CALL TEAM BREVITY ON +64 3 371 7593 AT LEAST FIVE BUSINESS DAYS PRIOR TO PROJECT CONSTRUCTION COMMENCEMENT.

NOTES:

1. REFER SPECIFICATION SHEET FOR CONTRACTOR AND INSTALLATION REQUIREMENTS.
2. ANY CHANGES ON SITE TO BE APPROVED BY BREVITY LTD.
3. SEE SPECIFICATION SHEET FOR REQUIRED PERIMETER GAP
4. SEE SPECIFICATION SHEET FOR REQUIRED SUSPENSION SPACING
5. MAXIMUM PLENUM HEIGHT TO BE 1600mm
6. ALL STANDARD ROOMS HAVE A TOP CROSS RAIL (TCR) SPACING OF 1200mm.
7. THE MAXIMUM SPACING FOR TCR IS UP TO 1200MM, WHILE THE BRACE SPACING WILL REMAIN THE SAME. C

DESIGNER:

Brevity

Victoria Park Market,
Unit 72B,
210 Victoria Street West
Auckland 1010

+64 9 216 7104
www.teambrevity.com

Tolerances (unless specified)	1-100	<1000	>1000
	± 2	± 10	± 70

All dim. in mm

Rev	Description
A	FOR CONSENT
B	FOR CONSENT
C	FOR CONSENT

Designed	BREVITY LTD	30/10/24
Drawn	BREVITY LTD	30/10/24
Approved	BREVITY LTD	30/10/24

NACCI TIMBER SYSTEMS
SEISMIC BRACING LAYOUT - WELLINGTON - 15kg/m2

Scale: Do not Scale

DRG No. 23060268-01C

NOT TO SCALE

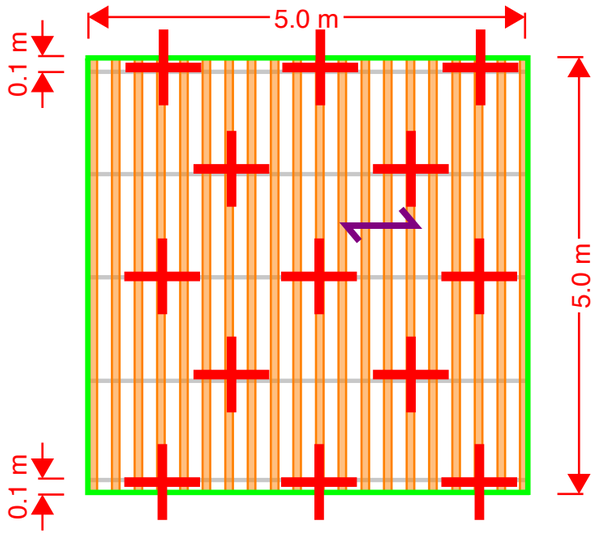

Standard 5m x 5m Room

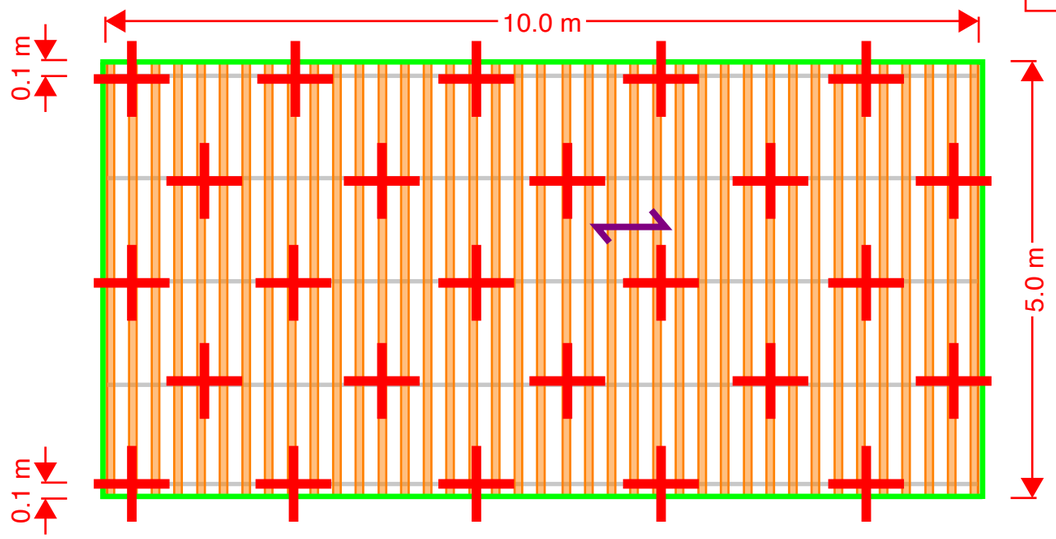

Standard 10m x 5m Room

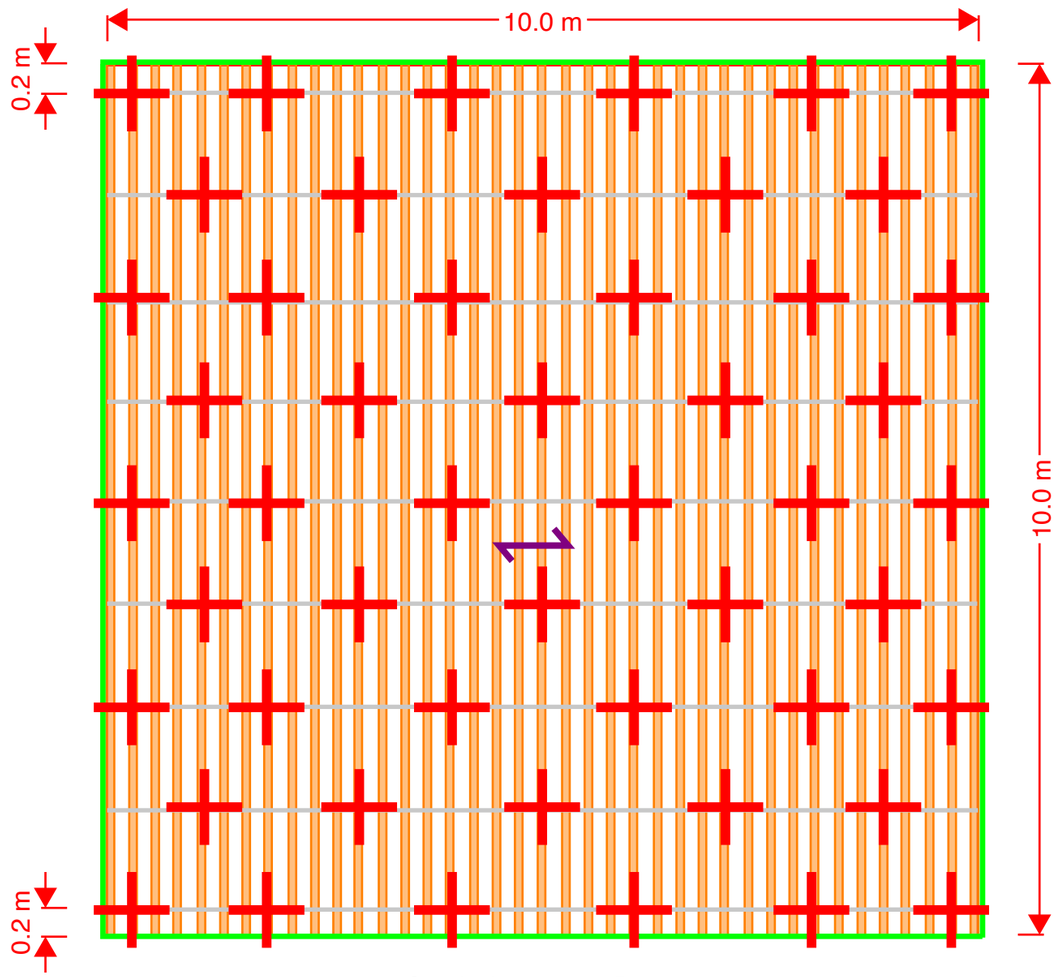

Standard 10m x 10m Room

BRACING LEGEND:

- TWO WAY BACK BRACE
- FIXED PERIMETER CONNECTION
- FLOATING PERIMETER CONNECTION (SEE SPEC)
- DIRECTION OF MAIN TEE OR TOP CROSS RAIL

TO ENSURE ADEQUATE CONSTRUCTION MONITORING IS CARRIED OUT, PLEASE CALL TEAM BREVITY ON +64 3 371 7593 AT LEAST FIVE BUSINESS DAYS PRIOR TO PROJECT CONSTRUCTION COMMENCEMENT.

NOTES:

1. REFER SPECIFICATION SHEET FOR CONTRACTOR AND INSTALLATION REQUIREMENTS.
2. ANY CHANGES ON SITE TO BE APPROVED BY BREVITY LTD.
3. SEE SPECIFICATION SHEET FOR REQUIRED PERIMETER GAP
4. SEE SPECIFICATION SHEET FOR REQUIRED SUSPENSION SPACING
5. MAXIMUM PLENUM HEIGHT TO BE 1600mm
6. ALL STANDARD ROOMS HAVE A TOP CROSS RAIL (TCR) SPACING OF 1200mm.
7. THE MAXIMUM SPACING FOR TCR IS UP TO 1200MM, WHILE THE BRACE SPACING WILL REMAIN THE SAME.

C

DESIGNER:

Brevity

Victoria Park Market,
Unit 72B,
210 Victoria Street West
Auckland 1010

+64 9 216 7104
www.teambrevity.com

Tolerances (unless specified)	1-100	<1000	>1000
	± 2	± 10	± 70

All dim. in mm

Rev	Description
A	FOR CONSENT
B	FOR CONSENT
C	FOR CONSENT

Designed	BREVITY LTD	30/10/24
Drawn	BREVITY LTD	30/10/24
Approved	BREVITY LTD	30/10/24

NACCI TIMBER SYSTEMS
SEISMIC BRACING LAYOUT - WELLINGTON - 35kg/m2

Scale: Do not Scale

DRG No. 23060268-01C

NOT TO SCALE

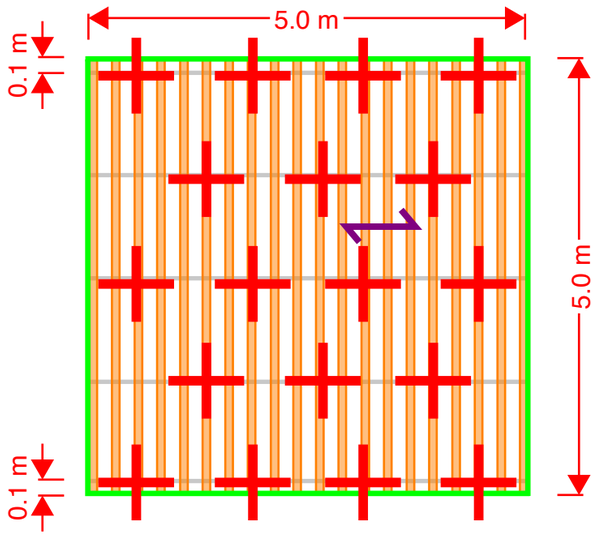

Standard 5m x 5m Room

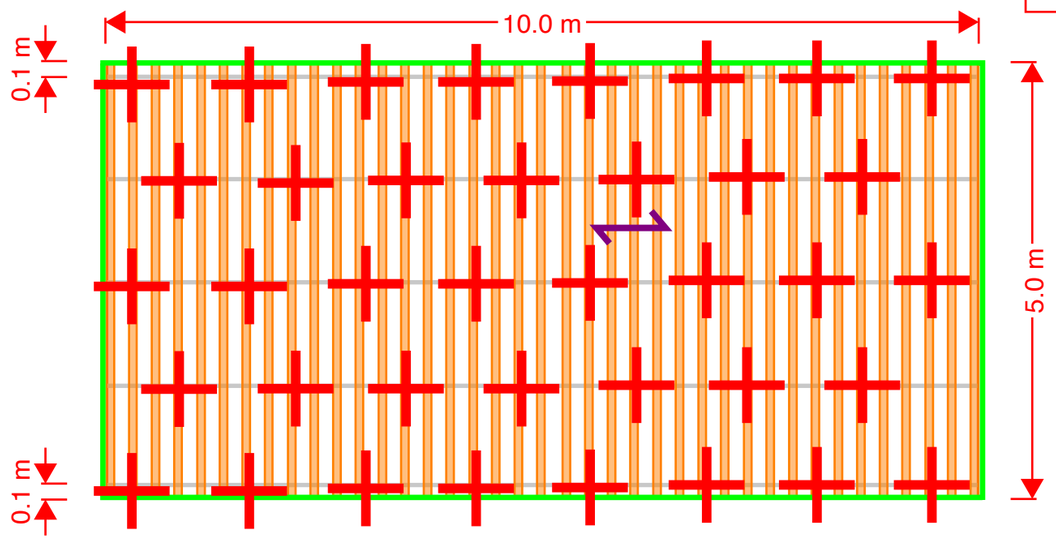

Standard 10m x 5m Room

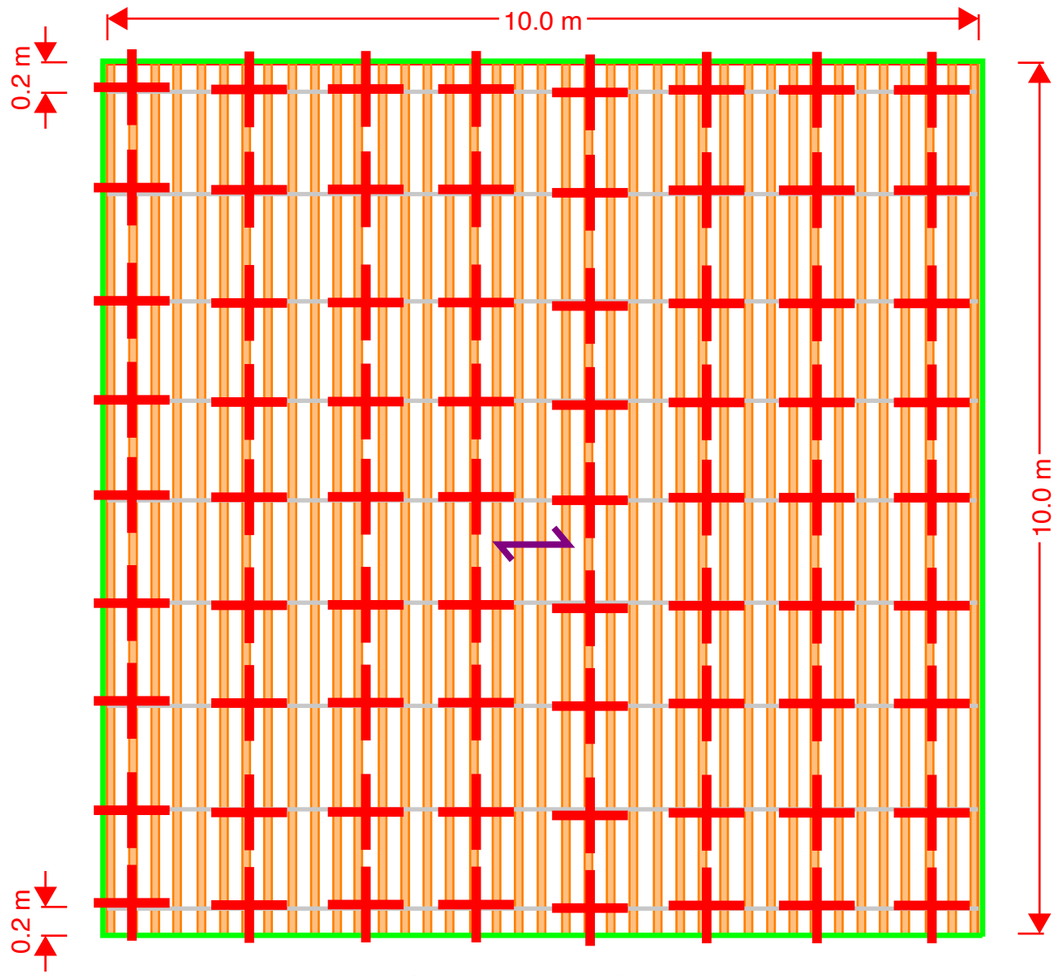

Standard 10m x 10m Room

BRACING LEGEND:

- TWO WAY BACK BRACE
- FIXED PERIMETER CONNECTION
- FLOATING PERIMETER CONNECTION (SEE SPEC)
- DIRECTION OF MAIN TEE OR TOP CROSS RAIL

TO ENSURE ADEQUATE CONSTRUCTION MONITORING IS CARRIED OUT, PLEASE CALL TEAM BREVITY ON +64 3 371 7593 AT LEAST FIVE BUSINESS DAYS PRIOR TO PROJECT CONSTRUCTION COMMENCEMENT.

NOTES:

1. REFER SPECIFICATION SHEET FOR CONTRACTOR AND INSTALLATION REQUIREMENTS.
2. ANY CHANGES ON SITE TO BE APPROVED BY BREVITY LTD.
3. SEE SPECIFICATION SHEET FOR REQUIRED PERIMETER GAP
4. SEE SPECIFICATION SHEET FOR REQUIRED SUSPENSION SPACING
5. MAXIMUM PLENUM HEIGHT TO BE 1600mm
6. ALL STANDARD ROOMS HAVE A TOP CROSS RAIL (TCR) SPACING OF 1200mm.
7. THE MAXIMUM SPACING FOR TCR IS UP TO 1200MM, WHILE THE BRACE SPACING WILL REMAIN THE SAME.

C

DESIGNER:

Brevity

Victoria Park Market,
Unit 72B,
210 Victoria Street West
Auckland 1010

+64 9 216 7104
www.teambrevity.com

Tolerances (unless specified)	1-100	<1000	>1000
	± 2	± 10	± 70

All dim. in mm

Rev	Description
A	FOR CONSENT
B	FOR CONSENT
C	FOR CONSENT

Designed	BREVITY LTD	30/10/24
Drawn	BREVITY LTD	30/10/24
Approved	BREVITY LTD	30/10/24

NACCI TIMBER SYSTEMS
SEISMIC BRACING LAYOUT - WELLINGTON - 50kg/m2

Scale: Do not Scale

DRG No. 23060268-01C

NZS 1170.5 - Specification for Seismic Bracing of Suspended Ceilings

Project Details

Job Number:	23060268-01
Job Title:	Christchurch - Generic NACCI System
Client:	NACCI Timber Systems
Job Revision:	A
Issue Date:	02/10/24

Building Parameters

Location:	Christchurch
Structure Height:	20 m
Importance Level:	IL2
Design Working Life:	50 years
Site Subsoil Class:	C

Ceiling Specification Summary

Revision	Ceiling Description	Grid Type	Infill Type	Ceiling Height (m)	Plenum Height (mm)	Infill Mass (kg/m^2)	MT/TCR Max Spacing (mm)	Suspension (mm)	Ductility 1.25	Part Category	Seismic Action (G)	Max MT/TCR Length (m)	Perimeter Gap (mm)	SLS Wall Load (N/m)	ULS Wall Load (N/m)
A	5m x 5m (5kg/m2)	NACCI System	Manual Input	10.00	1600	5	1200	1000	1.25	P2/P3	1.81	4.44	40	261	887
A	5m x 5m (15kg/m2)	NACCI System	Manual Input	10.00	1600	15	1200	1000	1.25	P2/P3	1.81	2.22	40	0	0
A	5m x 5m (35kg/m2)	NACCI System	Manual Input	10.00	1600	35	1200	600	1.25	P2/P3	1.81	1.11	40	0	0
A	5m x 5m (50kg/m2)	NACCI System	Manual Input	10.00	1600	50	1200	600	1.25	P2/P3	1.81	0.81	40	0	0
A	10m x 5m (5kg/m2)	NACCI System	Manual Input	10.00	1600	5	1200	1000	1.25	P2/P3	1.81	4.44	40	261	887
A	10m x 5m (15kg/m2)	NACCI System	Manual Input	10.00	1600	15	1200	1000	1.25	P2/P3	1.81	2.22	40	0	0
A	10m x 5m (35kg/m2)	NACCI System	Manual Input	10.00	1600	35	1200	600	1.25	P2/P3	1.81	1.11	40	0	0
A	10m x 5m (50kg/m2)	NACCI System	Manual Input	10.00	1600	50	1200	600	1.25	P2/P3	1.81	0.81	40	0	0
A	10m x 10m (5kg/m2)	NACCI System	Manual Input	10.00	1600	5	1200	1000	1.25	P2/P3	1.81	4.44	40	0	0
A	10m x 10m (15kg/m2)	NACCI System	Manual Input	10.00	1600	15	1200	1000	1.25	P2/P3	1.81	2.22	40	0	0
A	10m x 10m (35kg/m2)	NACCI System	Manual Input	10.00	1600	35	1200	600	1.25	P2/P3	1.81	1.11	40	0	0
A	10m x 10m (50kg/m2)	NACCI System	Manual Input	10.00	1600	50	1200	600	1.25	P2/P3	1.81	0.81	40	0	0

C

Notes

MT: Main Tee of tile and grid ceiling system
CT: Cross Tee of tile and grid ceiling system
TCR: Top Cross Rail of concealed ceiling system
FC: Furring Channel of concealed ceiling system
Ceiling Height is measured from ground level
Plenum Height is distance from ceiling level to structure above
Additional service load of 3.0 kg/m^2 has been allowed for in seismic mass
2.5% Inter-story drift allowed for ULS movement

The maximum spacing for TCR is up to 1200 mm, while the brace spacing will remain the same.

C

NOT TO SCALE

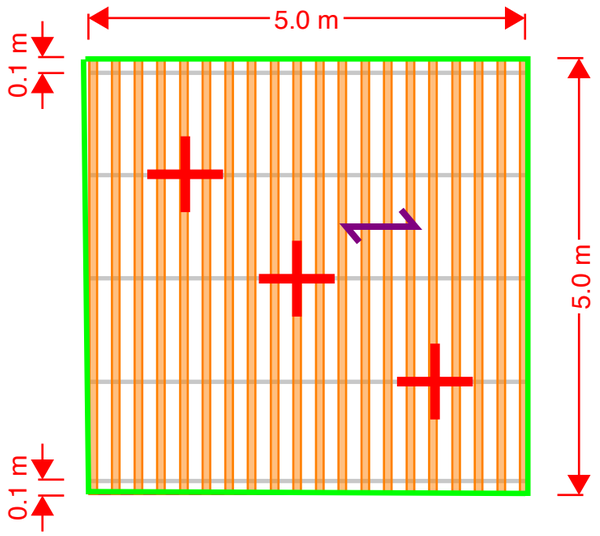

Standard 5m x 5m Room

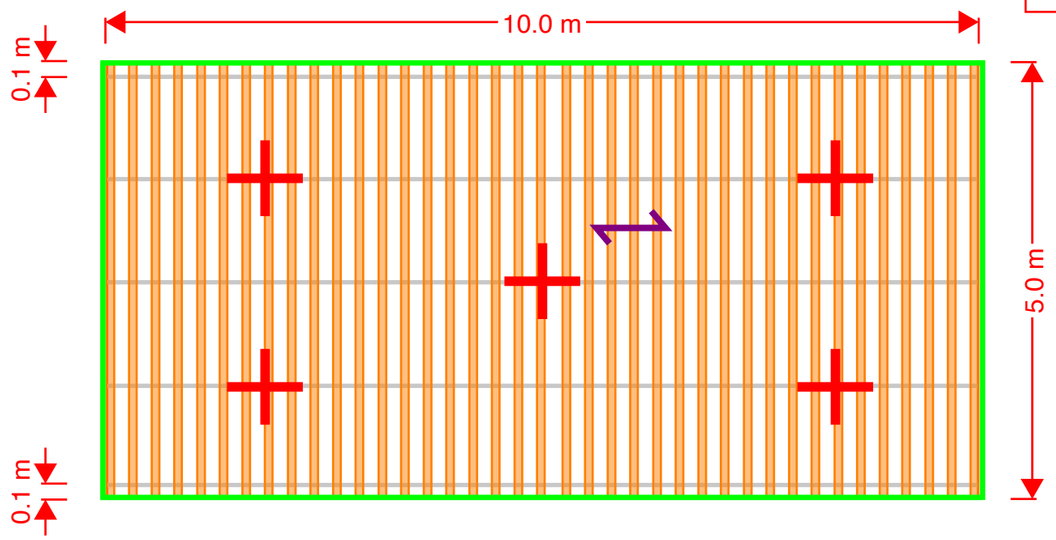

Standard 10m x 5m Room

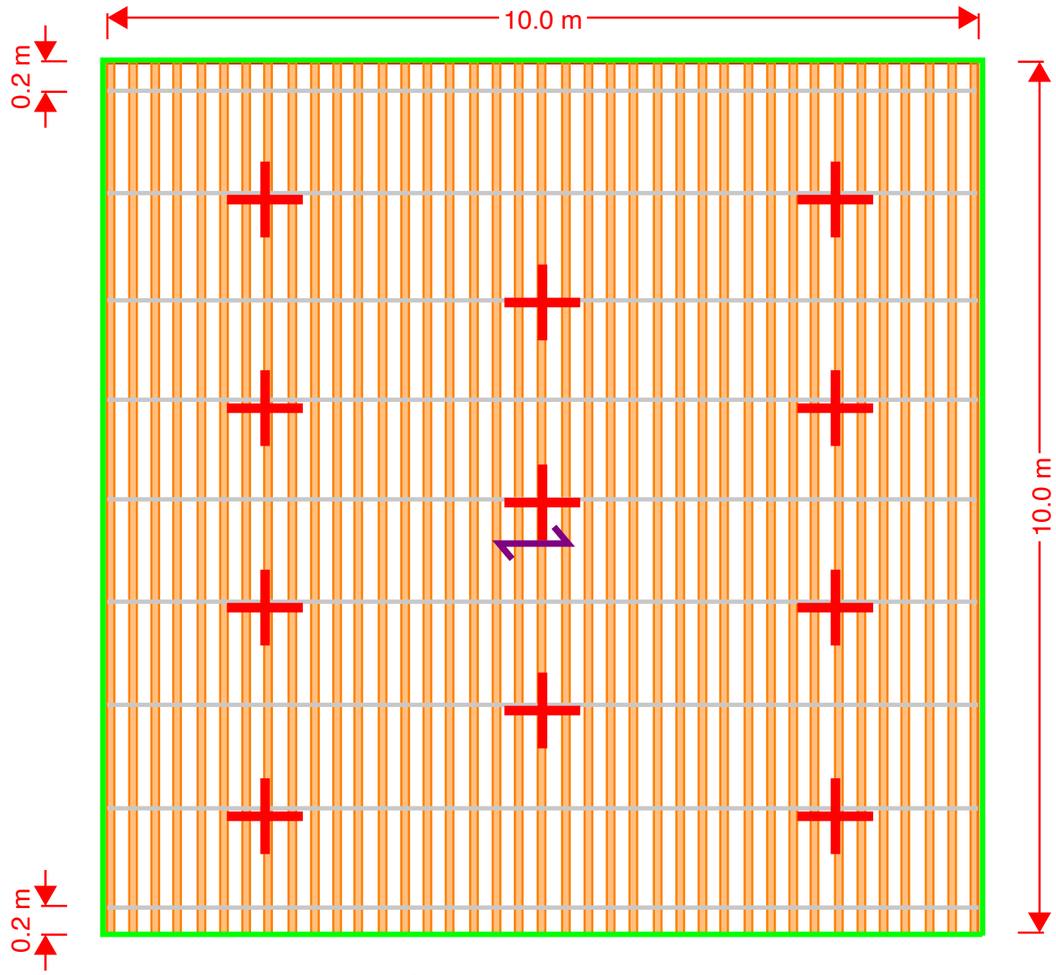

Standard 10m x 10m Room

BRACING LEGEND:

- TWO WAY BACK BRACE
- FIXED PERIMETER CONNECTION
- FLOATING PERIMETER CONNECTION (SEE SPEC)
- DIRECTION OF MAIN TEE OR TOP CROSS RAIL

TO ENSURE ADEQUATE CONSTRUCTION MONITORING IS CARRIED OUT, PLEASE CALL TEAM BREVITY ON +64 3 371 7593 AT LEAST FIVE BUSINESS DAYS PRIOR TO PROJECT CONSTRUCTION COMMENCEMENT.

NOTES:

1. REFER SPECIFICATION SHEET FOR CONTRACTOR AND INSTALLATION REQUIREMENTS.
2. ANY CHANGES ON SITE TO BE APPROVED BY BREVITY LTD.
3. SEE SPECIFICATION SHEET FOR REQUIRED PERIMETER GAP
4. SEE SPECIFICATION SHEET FOR REQUIRED SUSPENSION SPACING
5. MAXIMUM PLENUM HEIGHT TO BE 1600mm
6. ALL STANDARD ROOMS HAVE A TOP CROSS RAIL (TCR) SPACING OF 1200mm.
7. THE MAXIMUM SPACING FOR TCR IS UP TO 1200MM, WHILE THE BRACE SPACING WILL REMAIN THE SAME.

C

DESIGNER:

Brevity

Victoria Park Market,
Unit 72B,
210 Victoria Street West
Auckland 1010

+64 9 216 7104
www.teambrevity.com

Tolerances (unless specified)	1-100	<1000	>1000
	± 2	± 10	± 70

All dim. in mm

Rev	Description
A	FOR CONSENT
B	FOR CONSENT
C	FOR CONSENT

Designed	BREVITY LTD	30/10/24
Drawn	BREVITY LTD	30/10/24
Approved	BREVITY LTD	30/10/24

NACCI TIMBER SYSTEMS
SEISMIC BRACING LAYOUT - CHRISTCHURCH - 5kg/m2

Scale: Do not Scale

DRG No. 23060268-01C

NOT TO SCALE

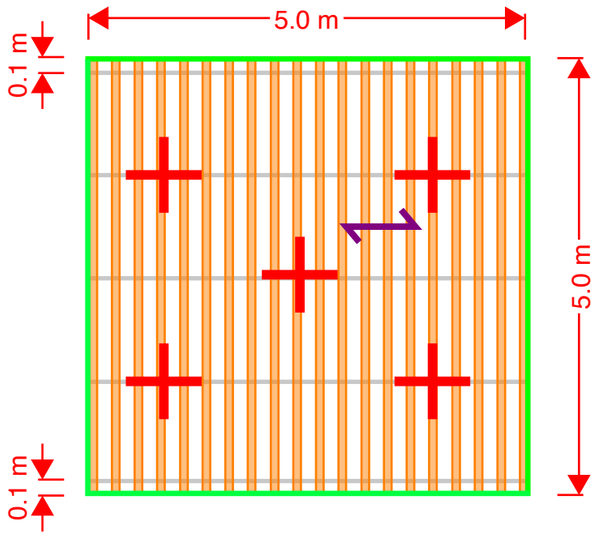

Standard 5m x 5m Room

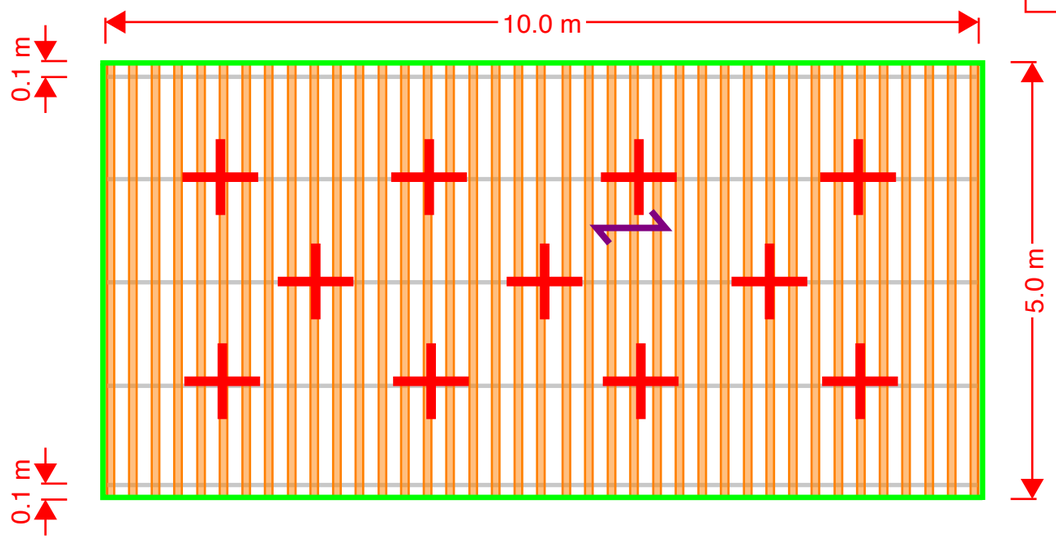

Standard 10m x 5m Room

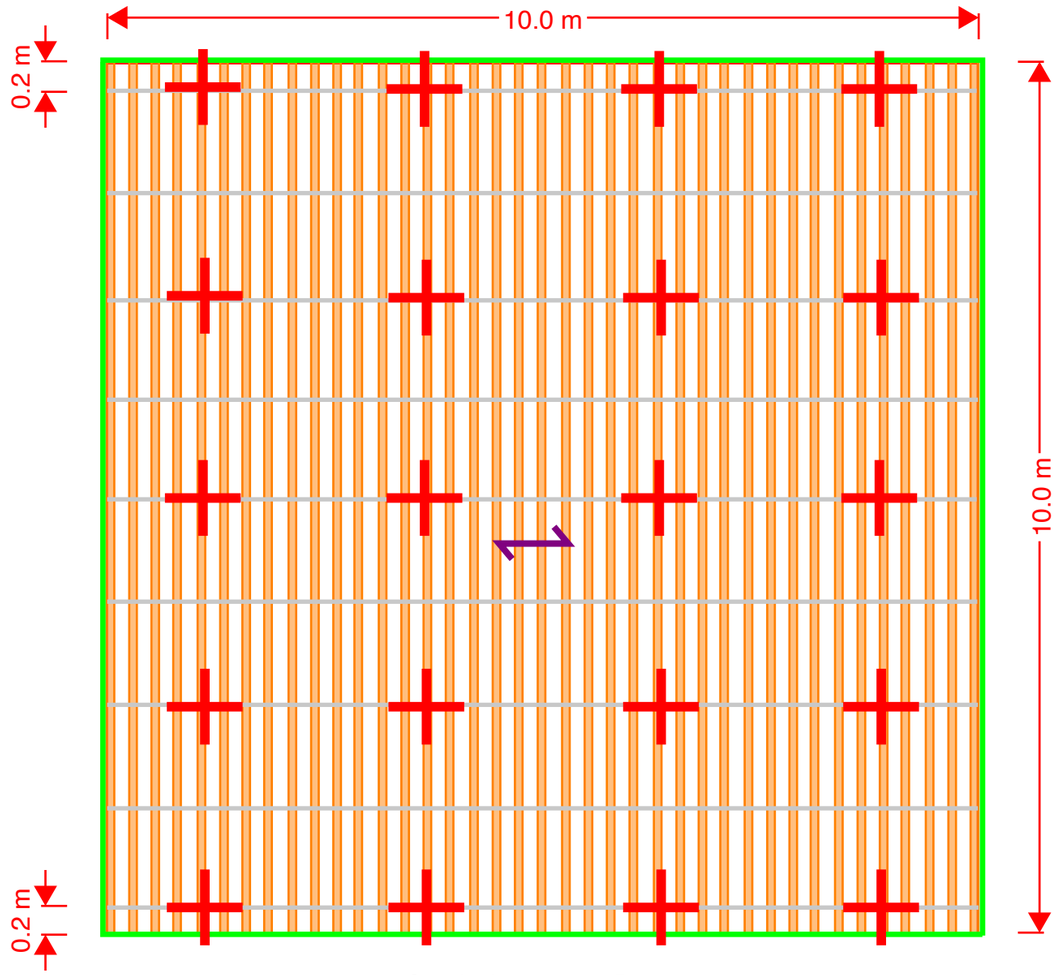

Standard 10m x 5m Room

BRACING LEGEND:

- TWO WAY BACK BRACE
- FIXED PERIMETER CONNECTION
- FLOATING PERIMETER CONNECTION (SEE SPEC)
- DIRECTION OF MAIN TEE OR TOP CROSS RAIL

TO ENSURE ADEQUATE CONSTRUCTION MONITORING IS CARRIED OUT, PLEASE CALL TEAM BREVITY ON +64 3 371 7593 AT LEAST FIVE BUSINESS DAYS PRIOR TO PROJECT CONSTRUCTION COMMENCEMENT.

NOTES:

1. REFER SPECIFICATION SHEET FOR CONTRACTOR AND INSTALLATION REQUIREMENTS.
2. ANY CHANGES ON SITE TO BE APPROVED BY BREVITY LTD.
3. SEE SPECIFICATION SHEET FOR REQUIRED PERIMETER GAP
4. SEE SPECIFICATION SHEET FOR REQUIRED SUSPENSION SPACING
5. MAXIMUM PLENUM HEIGHT TO BE 1600mm
6. ALL STANDARD ROOMS HAVE A TOP CROSS RAIL (TCR) SPACING OF 1200mm.
7. THE MAXIMUM SPACING FOR TCR IS UP TO 1200MM, WHILE THE BRACE SPACING WILL REMAIN THE SAME.

C

DESIGNER:

Brevity

Victoria Park Market,
Unit 72B,
210 Victoria Street West
Auckland 1010

+64 9 216 7104
www.teambrevity.com

Tolerances (unless specified)	1-100	<1000	>1000
	± 2	± 10	± 70

All dim. in mm

Rev	Description
A	FOR CONSENT
B	FOR CONSENT
C	FOR CONSENT

Designed	BREVITY LTD	30/10/24
Drawn	BREVITY LTD	30/10/24
Approved	BREVITY LTD	30/10/24

NACCI TIMBER SYSTEMS
SEISMIC BRACING LAYOUT - CHRISTCHURCH - 15kg/m2

Scale: Do not Scale

DRG No. 23060268-01C

NOT TO SCALE

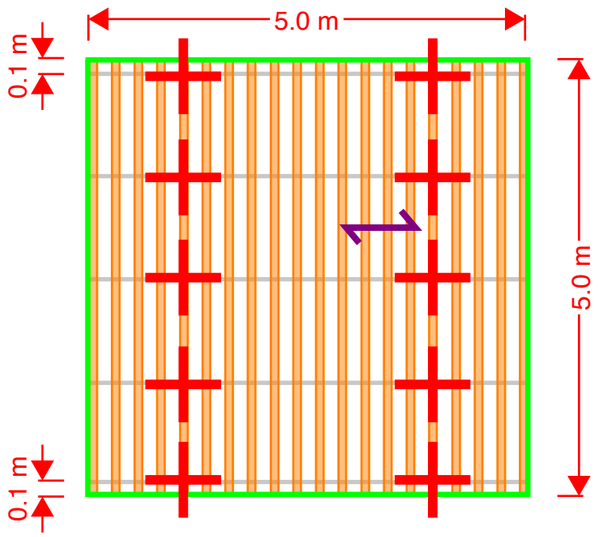

Standard 5m x 5m Room

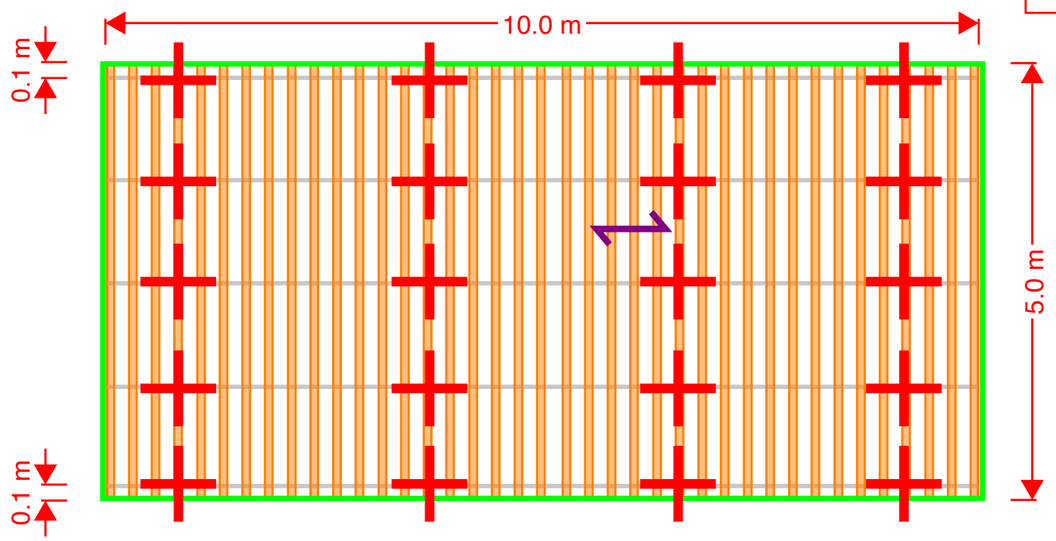

Standard 10m x 5m Room

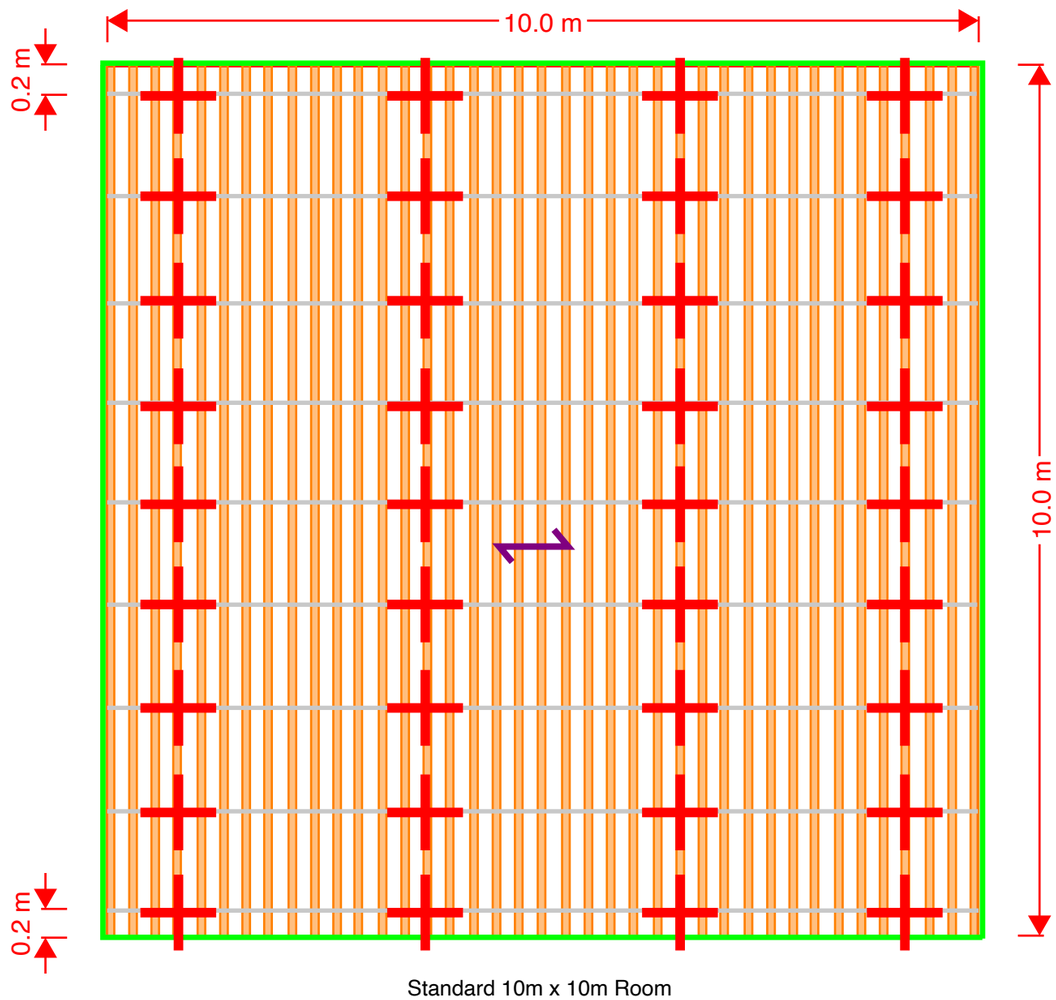

Standard 10m x 10m Room

BRACING LEGEND:

- TWO WAY BACK BRACE
- FIXED PERIMETER CONNECTION
- FLOATING PERIMETER CONNECTION (SEE SPEC)
- DIRECTION OF MAIN TEE OR TOP CROSS RAIL

TO ENSURE ADEQUATE CONSTRUCTION MONITORING IS CARRIED OUT, PLEASE CALL TEAM BREVITY ON +64 3 371 7593 AT LEAST FIVE BUSINESS DAYS PRIOR TO PROJECT CONSTRUCTION COMMENCEMENT.

NOTES:

1. REFER SPECIFICATION SHEET FOR CONTRACTOR AND INSTALLATION REQUIREMENTS.
2. ANY CHANGES ON SITE TO BE APPROVED BY BREVITY LTD.
3. SEE SPECIFICATION SHEET FOR REQUIRED PERIMETER GAP
4. SEE SPECIFICATION SHEET FOR REQUIRED SUSPENSION SPACING
5. MAXIMUM PLENUM HEIGHT TO BE 1600mm
6. ALL STANDARD ROOMS HAVE A TOP CROSS RAIL (TCR) SPACING OF 1200mm.
7. THE MAXIMUM SPACING FOR TCR IS UP TO 1200MM, WHILE THE BRACE SPACING WILL REMAIN THE SAME.

C

DESIGNER:

Brevity

Victoria Park Market,
Unit 72B,
210 Victoria Street West
Auckland 1010

+64 9 216 7104
www.teambrevity.com

Tolerances (unless specified)	1-100	<1000	>1000
	± 2	± 10	± 70

All dim. in mm

Rev	Description
A	FOR CONSENT
B	FOR CONSENT
C	FOR CONSENT

Designed	BREVITY LTD	30/10/24
Drawn	BREVITY LTD	30/10/24
Approved	BREVITY LTD	30/10/24

NACCI TIMBER SYSTEMS
SEISMIC BRACING LAYOUT - CHRISTCHURCH - 35kg/m2

Scale: Do not Scale

DRG No. 23060268-01C

NOT TO SCALE

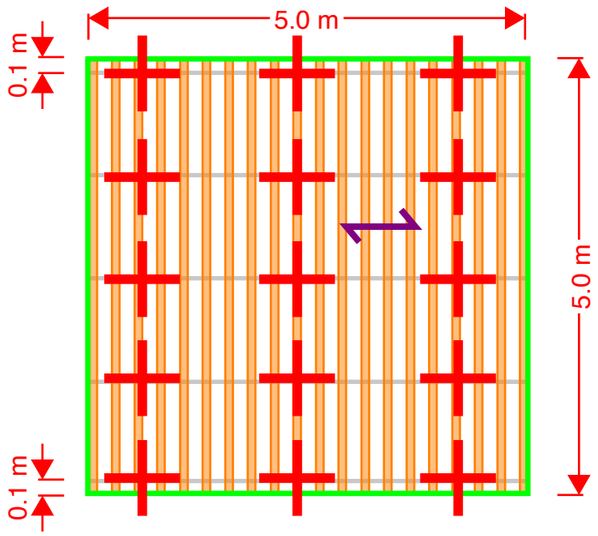

Standard 5m x 5m Room

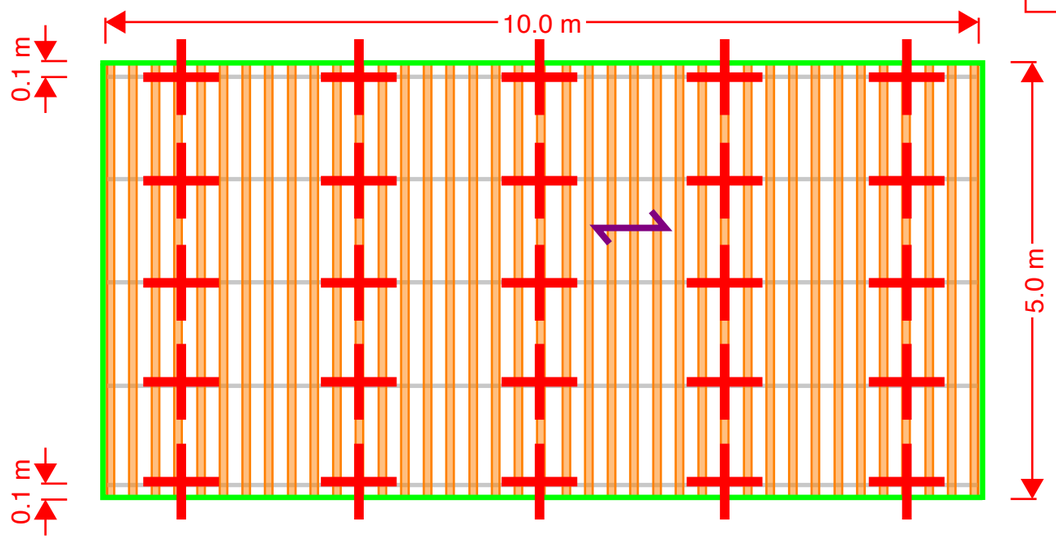

Standard 10m x 5m Room

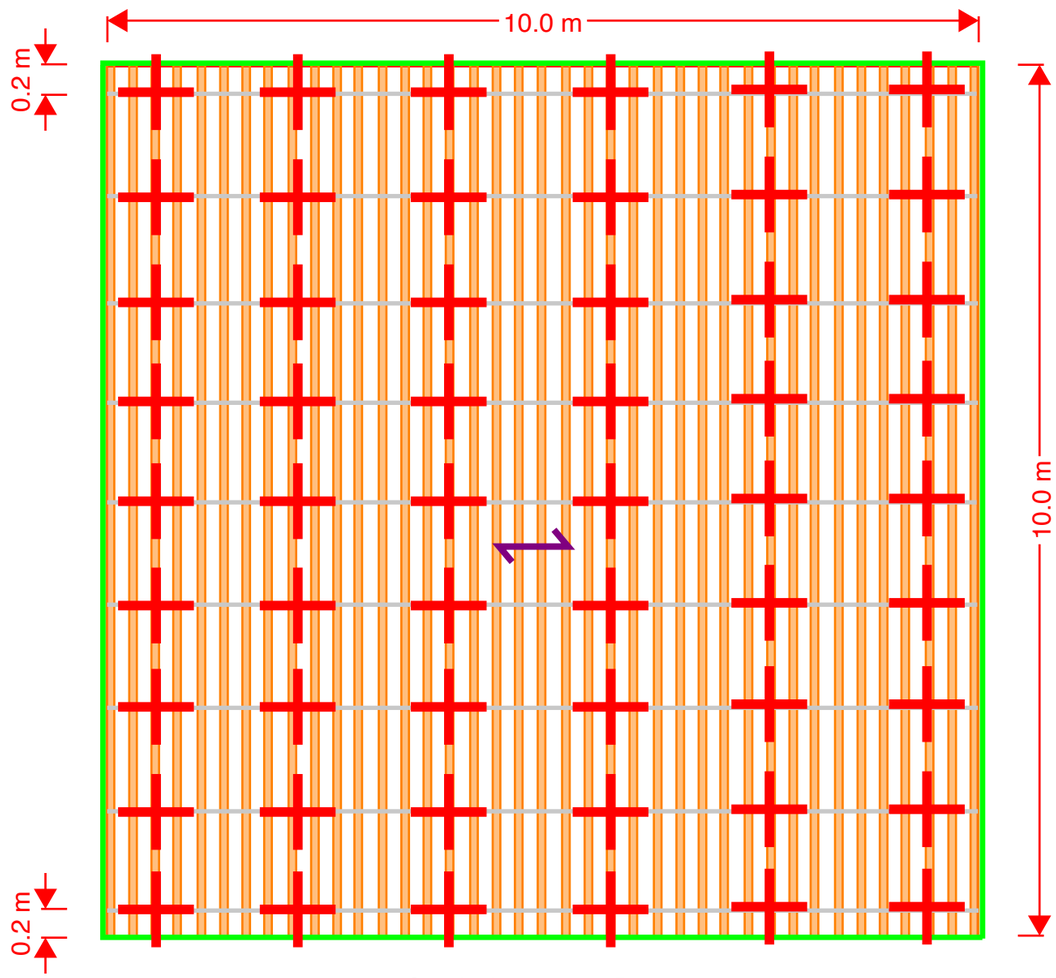

Standard 10m x 10m Room

BRACING LEGEND:

- TWO WAY BACK BRACE
- FIXED PERIMETER CONNECTION
- FLOATING PERIMETER CONNECTION (SEE SPEC)
- DIRECTION OF MAIN TEE OR TOP CROSS RAIL

TO ENSURE ADEQUATE CONSTRUCTION MONITORING IS CARRIED OUT, PLEASE CALL TEAM BREVITY ON +64 3 371 7593 AT LEAST FIVE BUSINESS DAYS PRIOR TO PROJECT CONSTRUCTION COMMENCEMENT.

NOTES:

1. REFER SPECIFICATION SHEET FOR CONTRACTOR AND INSTALLATION REQUIREMENTS.
2. ANY CHANGES ON SITE TO BE APPROVED BY BREVITY LTD.
3. SEE SPECIFICATION SHEET FOR REQUIRED PERIMETER GAP
4. SEE SPECIFICATION SHEET FOR REQUIRED SUSPENSION SPACING
5. MAXIMUM PLENUM HEIGHT TO BE 1600mm
6. ALL STANDARD ROOMS HAVE A TOP CROSS RAIL (TCR) SPACING OF 1200mm.
7. THE MAXIMUM SPACING FOR TCR IS UP TO 1200MM, WHILE THE BRACE SPACING WILL REMAIN THE SAME.

C

DESIGNER:

Brevity

Victoria Park Market,
Unit 72B,
210 Victoria Street West
Auckland 1010

+64 9 216 7104
www.teambrevity.com

Tolerances (unless specified)	1-100	<1000	>1000
	± 2	± 10	± 70

All dim. in mm

Rev	Description
A	FOR CONSENT
B	FOR CONSENT
C	FOR CONSENT

Designed	BREVITY LTD	30/10/24
Drawn	BREVITY LTD	30/10/24
Approved	BREVITY LTD	30/10/24

NACCI TIMBER SYSTEMS
SEISMIC BRACING LAYOUT - CHRISTCHURCH - 50kg/m2

Scale: Do not Scale

DRG No. 23060268-01C

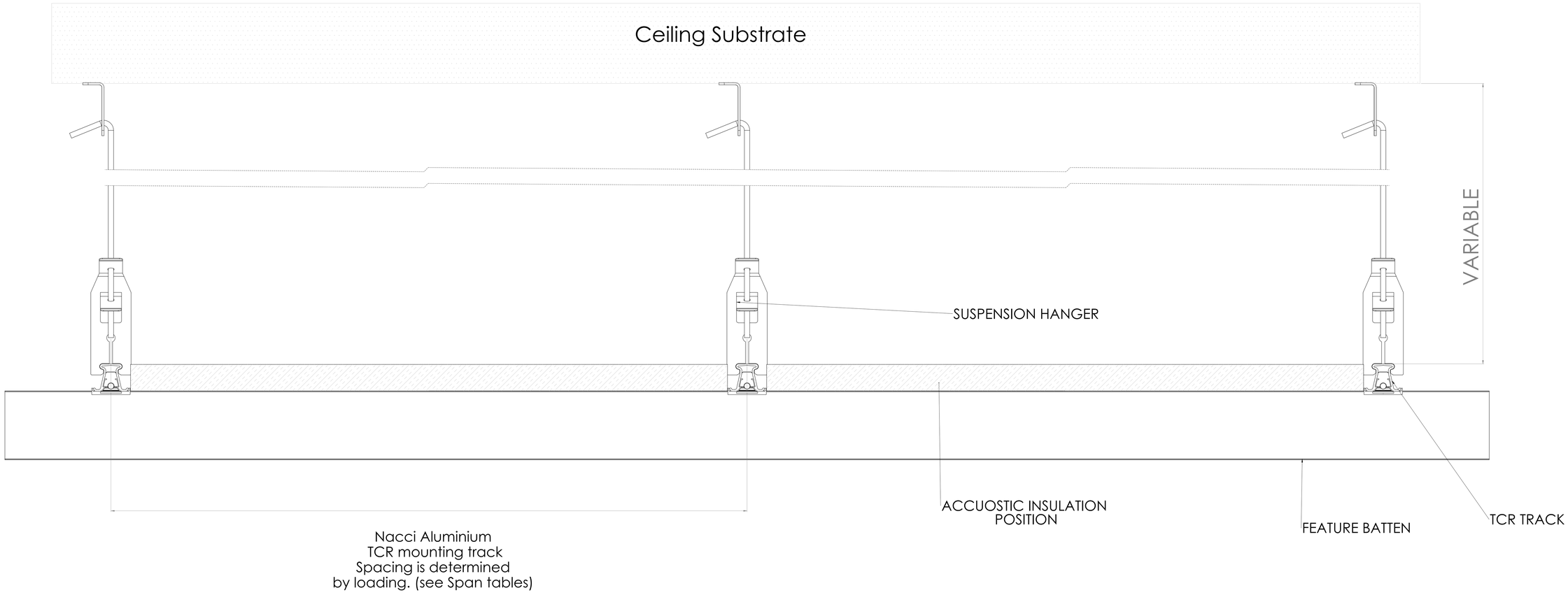

Rail span to be determined by manufacturer's Specification
Provided by others
Based on batten weights in the system

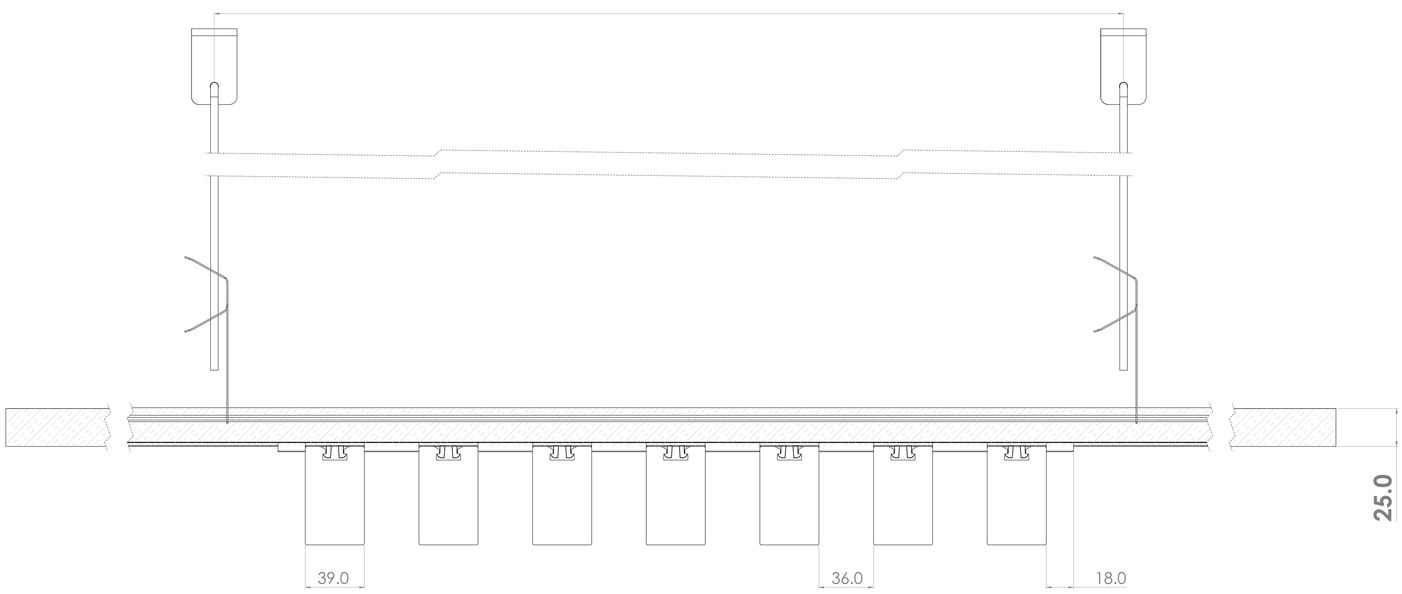

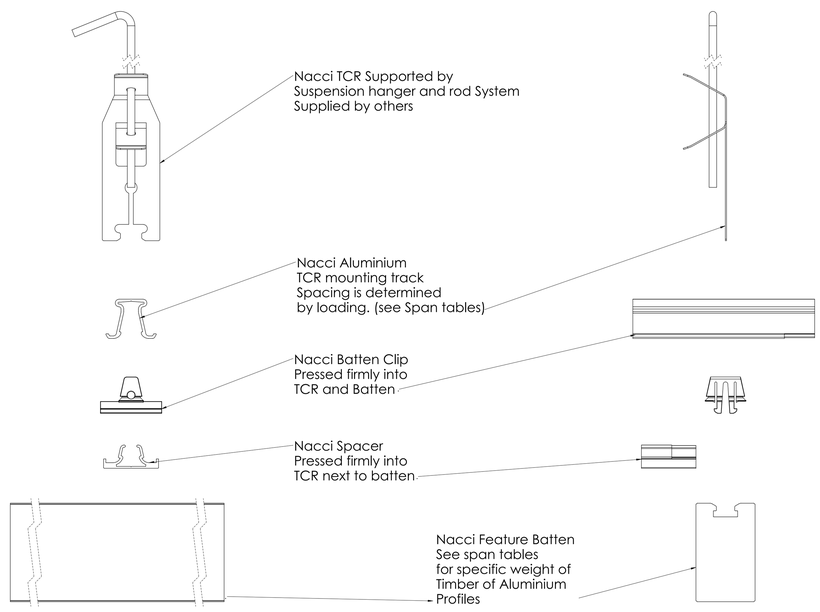

Batten Widths
Standard
39mm,64mm & 90mm
IN ANY PROFILE

Batten Spacing
Standard
0mm,18mm,36mm,61mm & 81mm

STANDARD TIMBER SIZES

BATTEN PROFILES CAN BE DEVELOPED PER PROJECT

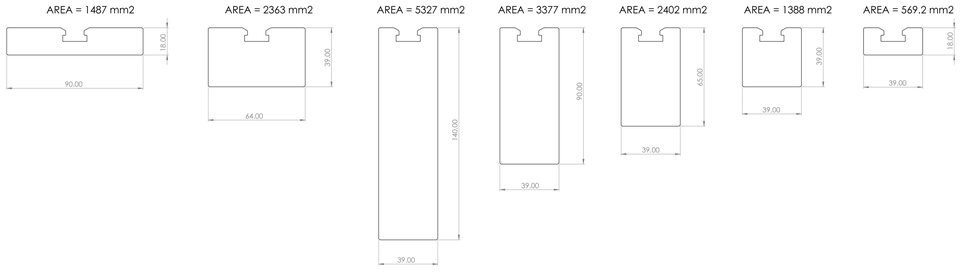

STANDARD ALUMINIUM SIZES

BATTEN PROFILES CAN BE DEVELOPED PER PROJECT

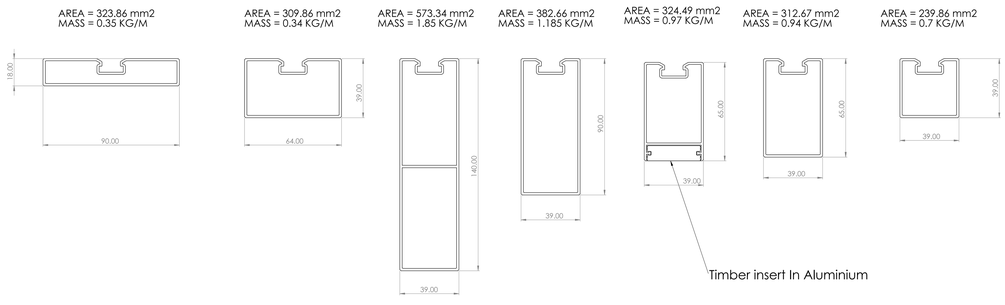

DATE: 04/10/24
JOB REF: 23060268-01
REVISION: A
CHECKED & APPROVED BY BREVITY LTD.
MATT BISHOP, CMENGNZ, CPENG
#243276

Brevity

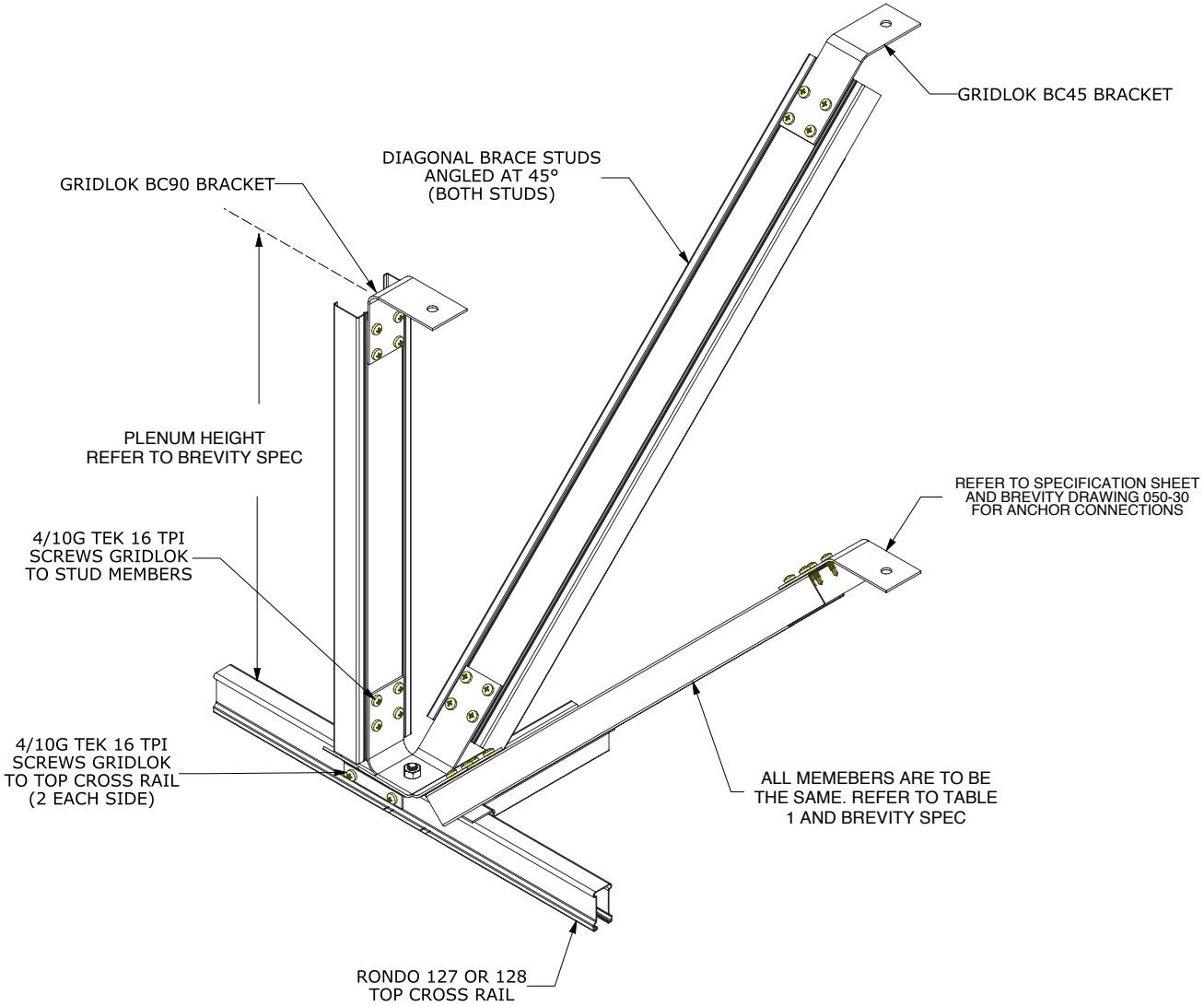

GRIDLOK BRACE - ISOMETRIC VIEW

TABLE 1 - PLENUM HEIGHT STUD SPECIFICATION

PLENUM HEIGHT (mm)	BRACE STUD TYPE
0-1600	64x0.50BMT LIPPED STUD
1600-2000	92x0.75BMT LIPPED STUD
2000-2600	BOXED 64x0.50BMT LIPPED STUD
2600-3000	BOXED 92x0.75BMT LIPPED STUD
3000+	SPECIFIC ENGINEERING REQUIRED

NOTES:
1. INSTALL STUDS AS PER MANUFACTURER'S SPEC

2. INSTALL GRIDLOCK AS PER MANUFACTURER'S SPEC

3. WHERE BOXED STUDS ARE USED INSTALL AS PER MANUFACTURER'S SPEC

4. SCREWED CONNECTION MIN SPACING AS SHOWN:

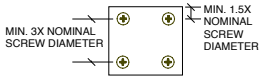

5. REPRESENTATIVE ONLY. SEE BREVITY SPEC FOR DETAILS

6. ANY CHANGES ON SITE TO BE APPROVED BY BREVITY

DESIGNER:

Brevity

Victoria Park Market,
Unit 72B,
210 Victoria Street West
Auckland 1010

+64 9 216 7104
www.teambrevity.com

Tolerances (unless specified)	1-100	<1000	>1000
	± 2	± 10	± 70

All dim. in mm

Rev	Description
A	FOR CONSENT

Designed	BREVITY LTD	16/01/23
Drawn	BREVITY LTD	16/01/23

GRIDLOK BRACE
SPECIFICATION DRAWING

Scale: Do not Scale

DRG No. 050-31E

Sheet 1 OF 1

DATE: 04/10/24
JOB REF: 23060268-01
REVISION: A
CHECKED & APPROVED BY BREVITY LTD.
MATT BISHOP, CMENGNZ, CPENG
#243276

Brevity

NACCI

Timber systems, beautifully designed, confidently built.

Clip-In Battens Installation Guide

DATE: 04/10/24
JOB REF: 23060268-01
REVISION: A
CHECKED & APPROVED BY BREVITY LTD.
MATT BISHOP, CMENGNZ, CPENG
#243276
Brevity

IMPORTANT NOTICE:

This installation manual aims to furnish designers, builders, and owners with information to effectively carry out their projects. It is important to note that not all project types, design requirements, and installation scenarios are covered herein. The Nacci team is available for assistance with project-specific solutions; contact us at office@nacci.co.nz.

Product recommendations provided in this manual are generalized guidelines on system functionality and are intended for technically competent individuals only. Due to variations in project-specific requirements, it is crucial that all engineering verification checks are conducted on the final design during the shop drawing stage by the contracted person or company responsible for the design. Nacci, operating as a supply-only entity in contractual terms, accepts no responsibility for "fit for purpose." Designers, builders, and owners must thoroughly comprehend product properties and capabilities before making final selections–refer to our Product Technical Datasheet for additional information.

Designers, builders, and owners are responsible for ensuring the currency of information in this manual by checking with Nacci or referring to our website nacci.co.nz. Nacci reserves the right to modify existing specifications and discontinue products without prior notice as new technology is introduced or industry standards are altered.

It is crucial to understand that the use of this manual does not:

- Guarantee acceptance or accreditation of a design, material, or building solution by any entity authorized to do so under the law.
- Imply compliance with the National Construction Code for a design, material, or building solution.
- Absolve the user from complying with any local, state, territory, or government legal requirements.

Receiving Delivery:

Upon being tallied and quality checked, each order undergoes careful packing, strapping, and shrink-wrapping. Our logistics department then organizes direct transport to your job site. Follow these steps when accepting delivery:

1. Verify the correct quantity of packs against the consignment note.
2. Assess the overall condition of the packs, recording any damage on the delivery document, and notify the supplier immediately.
3. Check the packing slip in the plastic sleeve on one of the packs to ensure every item is present and in the correct quantity.
4. Perform a quality check.
5. Notify Nacci within 7 days of delivery if any items are out of specification.

Onsite Storage:

Kiln-dried timber acclimatization of the timber prior to installation is typically unnecessary. Follow these guidelines for onsite storage:

- Ideally, keep the timber in its original pack until installation. If repacked, follow the original packing method to maintain straightness and quality.
- Store it at least 50mm above ground on a flat surface to prevent bowing.
- Store it in a cool, dry place, away from the weather, until ready for installation.

DATE: 04/10/24
JOB REF: 23060268-01
REVISION: A
CHECKED & APPROVED BY BREVITY LTD.
MATT BISHOP, CMENGNZ, CPENG
#243276
Brevity

Contents

Contents 3
The Clip-In Batten System 4
Materials, Set-out & Design considerations 5
Coverage Table 6
Components 7
Applications & Install Procedure 14
Suspended Ceilings application 17
Suspended Ceilings install procedure 18
Walls 20
Direct fix Ceilings / soffits application 21
Walls & Direct fix ceiling Install procedure 22
Curved Ceiling's & Walls. 22
Seismic Bracing details 23
Clip-In batten details 24
Anti slip L profile trim detail: 24
Anti slip Hidden detail: 24
External Corner In-fill 25
Internal Corner 25
Access Panels 26
Door systems 26
Ceiling penetrations 28
Wall penetrations 29
Batten Removal or Replacement 30
Nacci LED light Battens 31
Fire Compliance details 33
Materials & Specifications 35

DATE: 04/10/24
JOB REF: 23060268-01
REVISION: A
CHECKED & APPROVED BY BREVITY LTD.
MATT BISHOP, CMENGNZ, CPENG
#243276
Brevity

The Clip-In Batten System

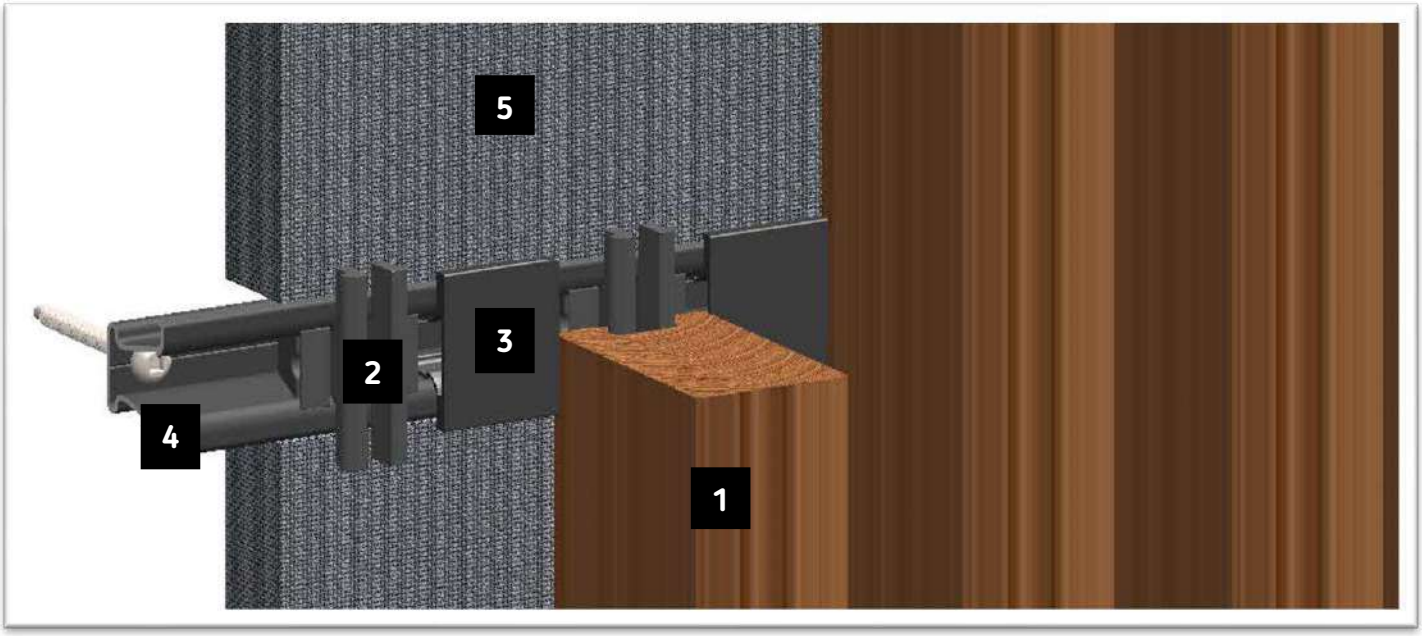

1. **Battens**
   Feature battens are offered in solid timber or aluminium, offering a selection of shapes, sizes, and coating choices. Battens can be arranged and spaced according to your preferences and easily 'Clipped' onto the pre-fixed clips, ensuring a swift and straight-forward installation process.

2. **Clip-In Batten Clip**
   Our innovative batten clips are first clipped into the mounting track, and then the batten is pushed on to the clip. Once all clips have been installed the batten is 'Clipped' into place. Alternatively, the clips can also be installed into the batten first, slid into position on the batten and pushed into the mounting track, all clicking into place easily & efficiently.

3. **Batten Spacer**
   The Batten spacer is a unique clip-in spacer which is used to set the space or centres of the battens. We have set spacings that produce an even number of battens per 1.2m set-out. The spacer can also be specified to a certain spacing required for the project.

4. **Mounting Track**
   The Mounting track has been engineered and designed with Strength and compatibility in mind. The tracks are fixed to a certain spacing directly to the substrate or Hung Directly with a suspended hanger. After this point Everything Can be 'clipped' into place quickly.

5. **Acoustic Backing 25mm**
   For interior applications, PET backing is provided, delivering excellent acoustic performance to enhance the overall environment. It is supplied in set widths to fit perfectly between the mounting tracks.

DATE: 04/10/24
JOB REF: 23060268-01
REVISION: A
CHECKED & APPROVED BY BREVITY LTD.
MATT BISHOP, CMENGNZ, CPENG
#243276
Brevity

Materials, Set-out & Design considerations

Our feature battens are available in a wide range of materials finishes and sizes, due to our flexible and customer focused approach we can supply custom batten profiles, timber species, powder coated finishes & even unique materials like satin brass. Our batten spacers are also made to size so anything is possible to suit your project requirements.

Our standard materials are:

- Western red cedar
- Yellow cedar
- Hemlock
- Sapele Mahogany
- Douglas Fir
- Rosewood
- Aluminium (powder coat / "timber look" / Anodized)
- Aluminium timber insert – Aluminium batten with a timber insert on the face.

Please refer to the generic Structural design table which provides estimates for loading, rail spans between clips & rail spacing for different materials. For non-standard materials Please get in touch for advised spacings and spans.

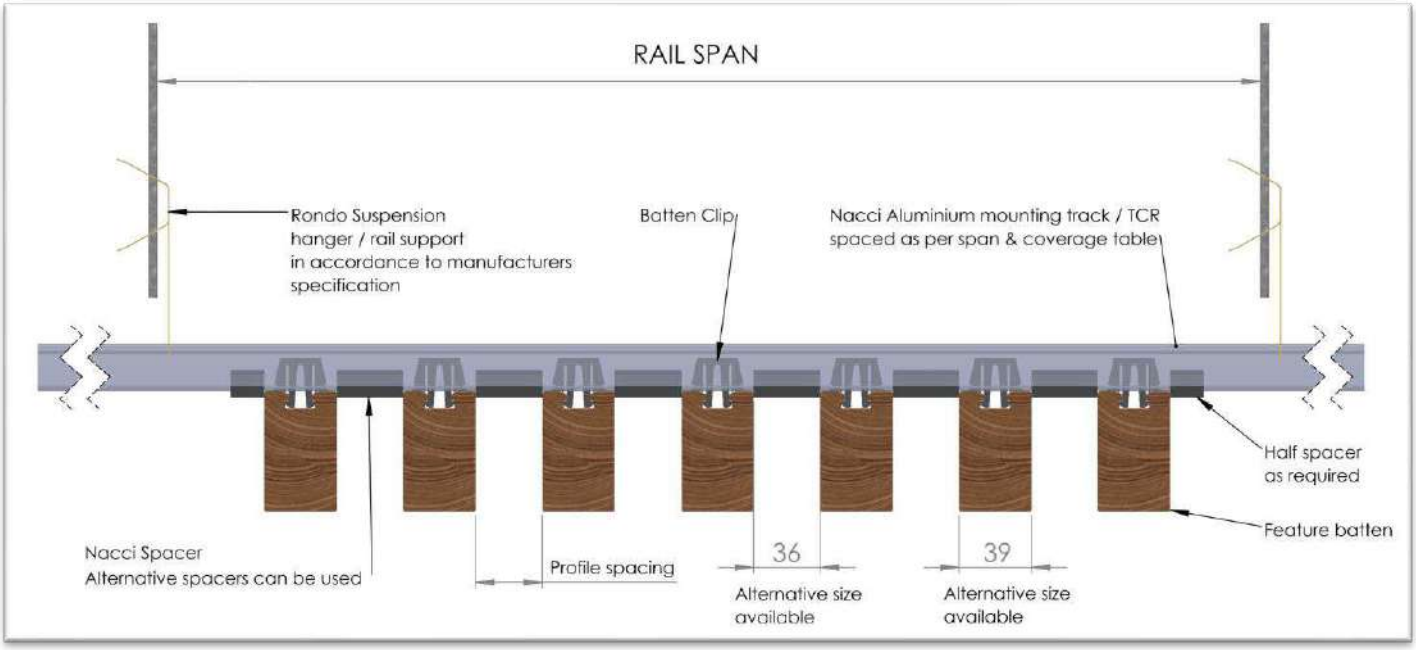

feature battens are available in a wide range of materials, shapes and sizes. Standard and custom designs are available on request.

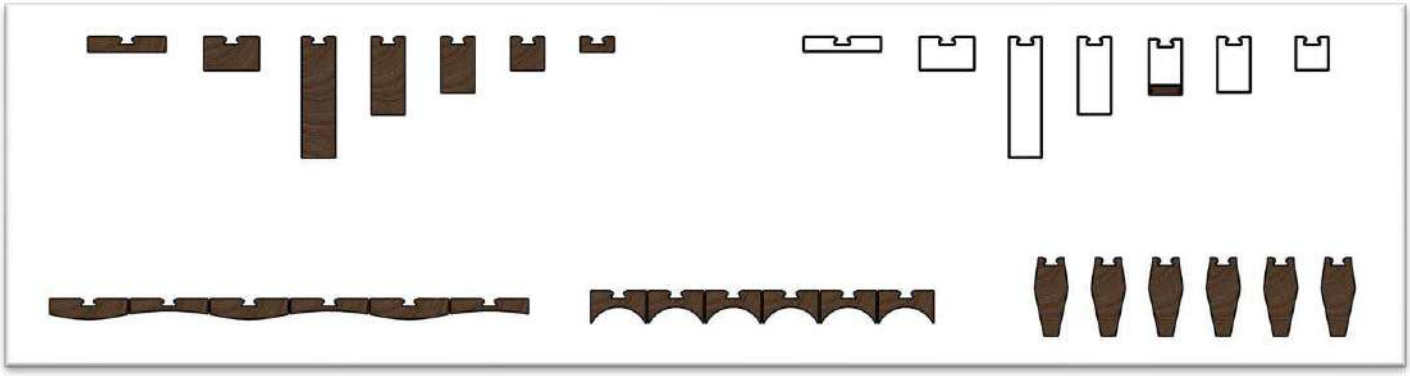

DATE: 04/10/24
JOB REF: 23060268-01
REVISION: A
CHECKED & APPROVED BY BREVITY LTD.
MATT BISHOP, CMENGNZ, CPENG
#243276
Brevity

Coverage Table

Profile O/A	Spacing (mm)	Batten Centres (mm)	Battens Per M2	Battens PER 1.2M	Mounting track Spacing (mm)	Clips per M2	Spacers per M2
any shape can be made from each standard batten size							
39X18	36	75	13.33	16	600	22.3	22.3
39X18	61	100	10	12	600	16.7	16.7
39X18	81	120	8.33	10	600	13.9	13.9
39X39	36	75	13.33	16	600	22.3	22.3
39X39	61	100	10	12	600	16.7	16.7
39X39	81	120	8.33	10	600	13.9	13.9
39X65	36	75	13.33	16	600	22.3	22.3
39X65	61	100	10	12	600	16.7	16.7
39X65	81	120	8.33	10	600	13.9	13.9
39X90	36	75	13.33	16	600	22.3	22.3
39X90	61	100	10	12	600	16.7	16.7
39X90	81	120	8.33	10	600	13.9	13.9
39X140	36	75	13.33	16	600	22.3	22.3
39X140	61	100	10	12	600	16.7	16.7
39X140	81	120	8.33	10	600	13.9	13.9
64X39	36	100	10.00	12.00	600	16.7	16.7
64X39	61	125	8.00	9.60	600	13.4	13.4
64X39	81	145	6.90	8.28	600	11.5	11.5
18X90	0	90	11.11	13.33	600	18.6	18.6
18X90	18	108	9.26	11.11	600	15.5	15.5
18X90	36	126	7.94	9.52	600	13.3	13.3
18X90	61	151	6.62	7.95	600	11.1	11.1

DATE: 04/10/24
JOB REF: 23060268-01
REVISION: A
CHECKED & APPROVED BY BREVITY LTD.
MATT BISHOP, CMENGNZ, CPENG
#243276
Brevity

Components

Standard Track 25mm Deep x 32mm wide

Standard lengths 4800mm & 3600mm

Designed to meet the demands of both interior and exterior settings, The 25 x 32mm standard track provides enhanced flexibility in fixing options. The tracks are fixed to a certain spacing directly to the substrate or Hung Directly with a suspended hanger. After this point Everything Can be 'Clipped' into place quickly. Typically, a 10g/12g self-drilling screw is employed for fixing; however, the choice may vary based on the substrate and specific engineering requirements of the project. It is advisable to consult with your engineer for precise recommendations.

Recommended Screw Fixing Centres: To ensure optimal performance, refer to the project-specific engineering documents and our product technical datasheet for the recommended screw fixing centres. This information is crucial for achieving secure and effective installation tailored to the unique needs of your project.

DATE: 04/10/24
JOB REF: 23060268-01
REVISION: A
CHECKED & APPROVED BY BREVITY LTD.
MATT BISHOP, CMENGNZ, CPENG
#243276
Brevity

Direct fixed Ceiling application – Standard track

The Standard mounting track is used for direct fix in a ceiling situation, the track is screw fixed to the ceiling structure / joists & the same 'Clip-In process is completed for easy install.

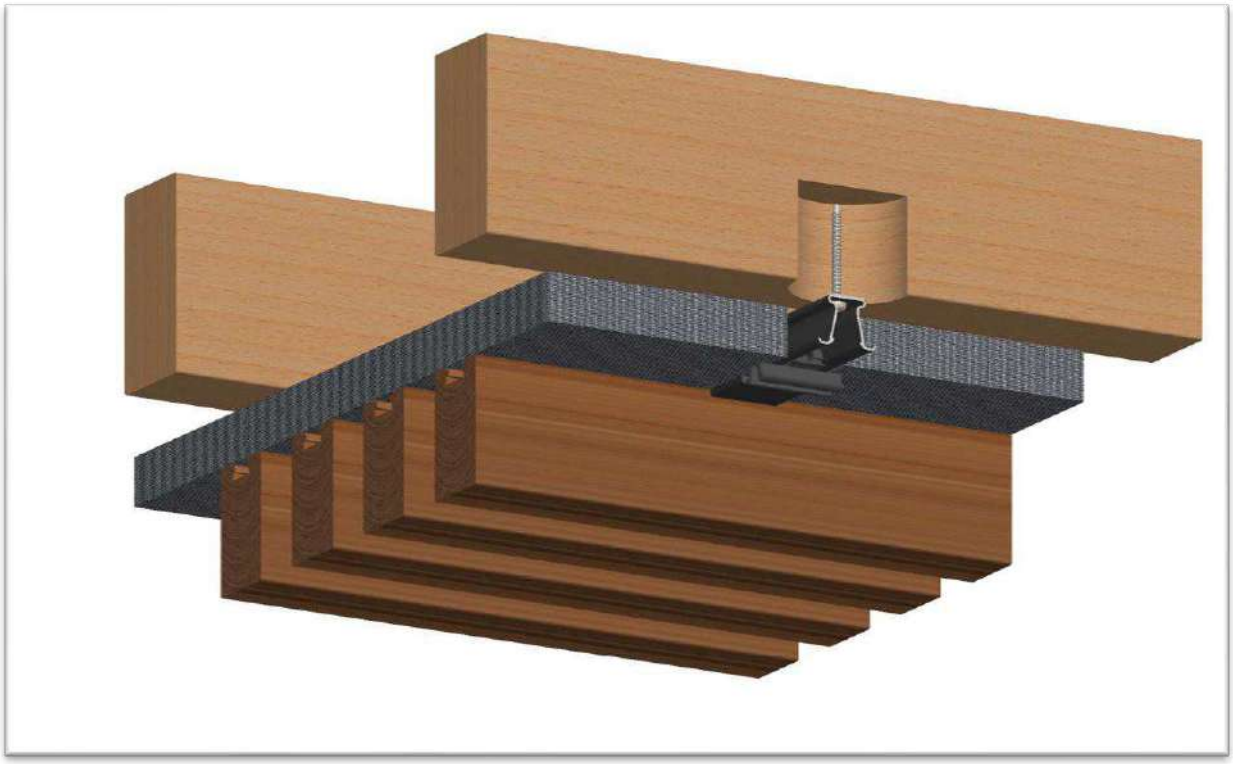

Walls application – Standard track

The Standard mounting track is used for direct fix in a wall situation, the track is screw fixed to the wall structure / studs generally 600mm apart & the same 'Clip-In process is completed for easy install.

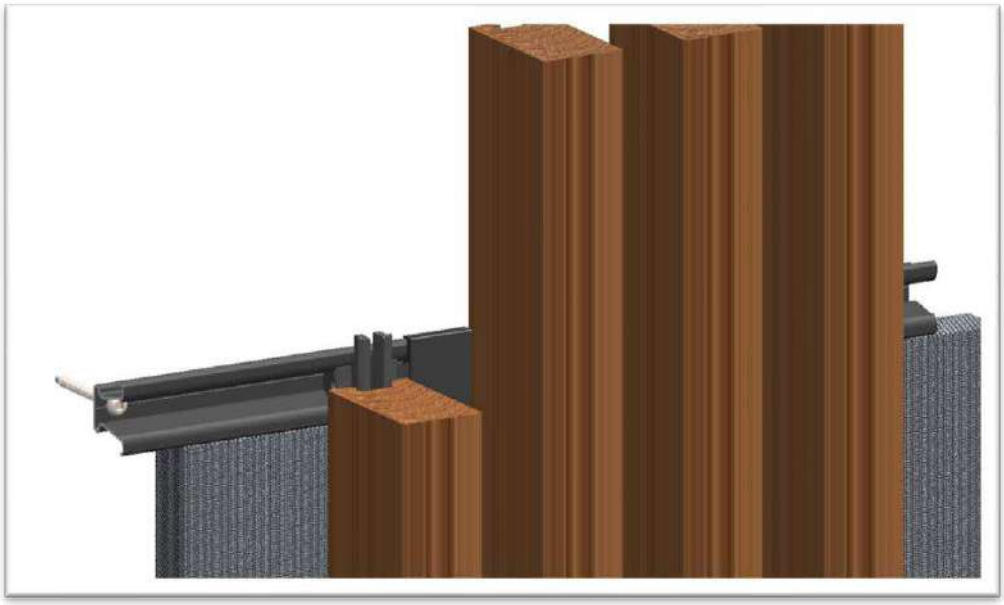

DATE: 04/10/24
JOB REF: 23060268-01
REVISION: A
CHECKED & APPROVED BY BREVITY LTD.
MATT BISHOP, CMENGNZ, CPENG
#243276
Brevity

Suspended Ceiling – Standard track

The Standard mounting track is used for suspended ceiling situation, the track is suspended directly with Specified ceiling hangers and rods (not supplied by Nacci) the same 'Clip-In' process is completed for easy install. Please see suppliers set out instructions for hanger positions and centres.

Direct Fix / Curve Track 25mm Deep x 27mm wide

The Direct Fix track is designed to fix battens individually without spacing clips and horizontal bracing, This Gives the user maximum flex-ability for curves, in-fills, end details, or when no backing is required. The track is Directly screwed to the substrate, and then the battens are clipped directly in-line with the track using the unique clip detail in the track. An L profile Anti-slip bracket is applied to the base to se the level. Packers can be used to space the battens evenly and quickly.

Also the screw flutes in the track can be used in conjunction with a punched bottom L profile or flat bar to set the batten centres.

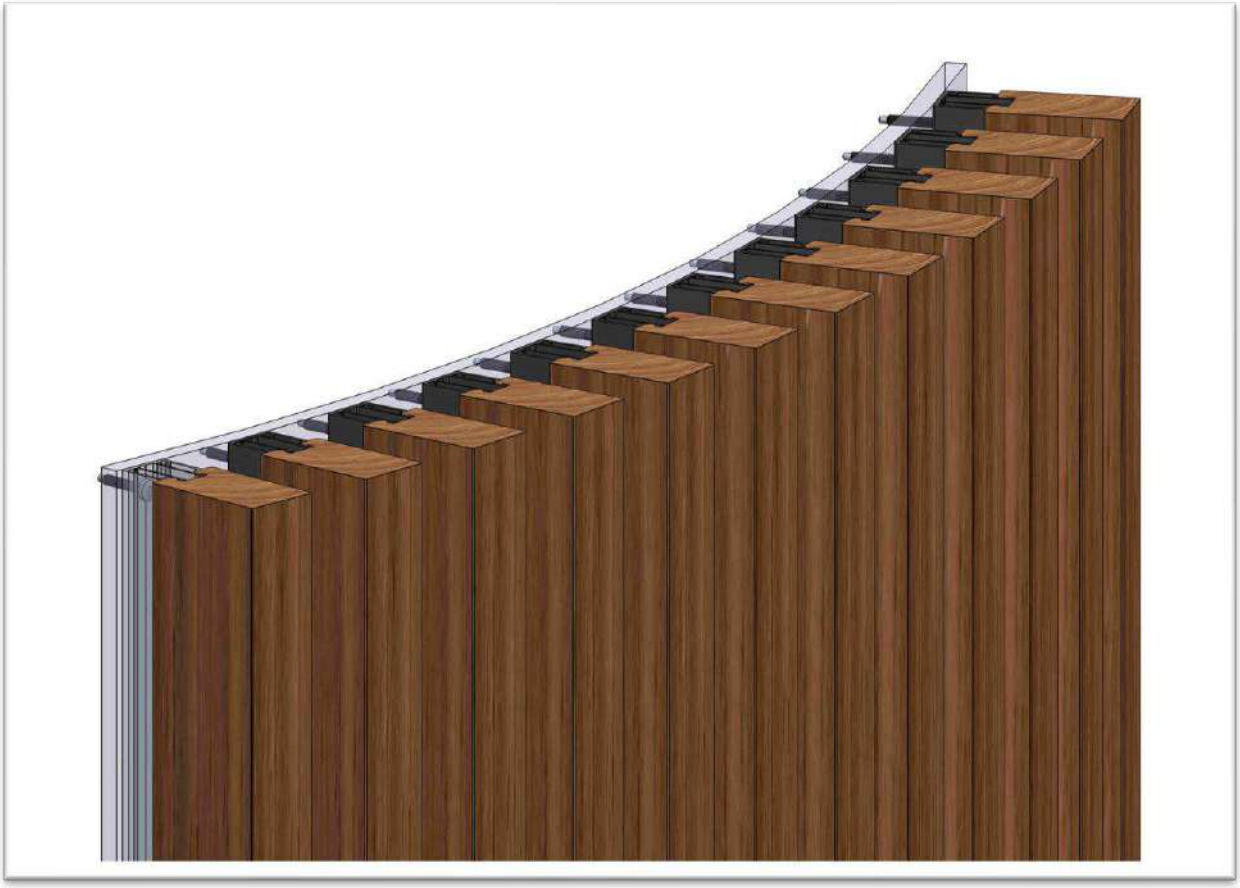

DATE: 04/10/24
JOB REF: 23060268-01
REVISION: A
CHECKED & APPROVED BY BREVITY LTD.
MATT BISHOP, CMENGNZ, CPENG
#243276
Brevity

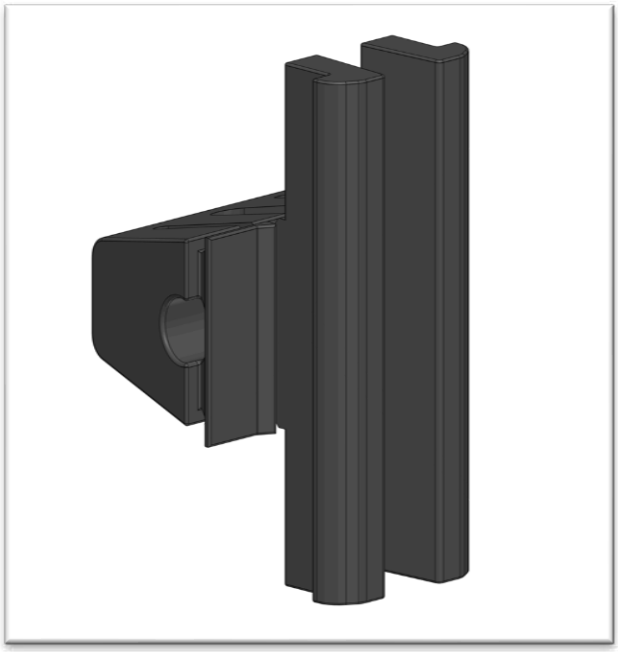

Batten Clip

Used to easily mount feature batten in place quickly. A multi-purpose design which clips into the both the batten and TCR with 2 techniques.

Batten Spacer

Used to space battens evenly and square. The spacer has a unique function where the lock in pressure can be adjusted with a tool to give full control over batten positions & assembly symmetry. Spacers can be cut to size and can also be ordered as a half spacer for smaller perimeter gaps.

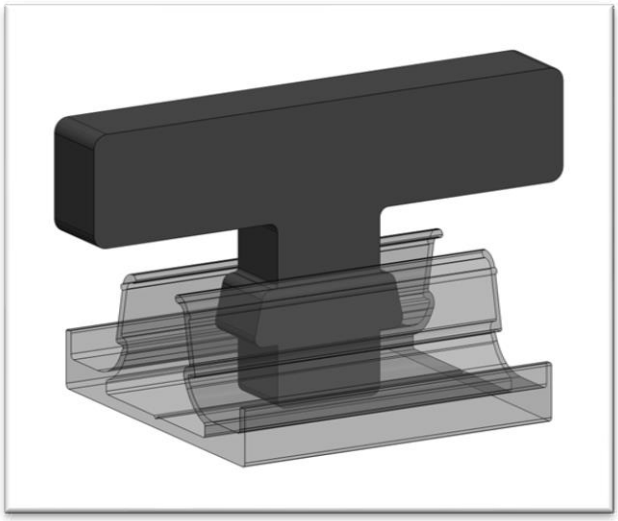

Spacer pressure tool

This unique simple tool allows the installer to quickly flex the spacer clip fins apart a few millimetres.

This allows a solid fixed spacer which can be used to keep battens straight during install, or in area's that are subject to external environments, like wind and rain.

DATE: 04/10/24
JOB REF: 23060268-01
REVISION: A
CHECKED & APPROVED BY BREVITY LTD.
MATT BISHOP, CMENGNZ, CPENG
#243276
Brevity

Batten Joiner

Required where battens are butt together off a clip, a specially designed batten joiner is provided to align the butt ends. The joiner can be used for aluminium battens and end-matched timber battens.

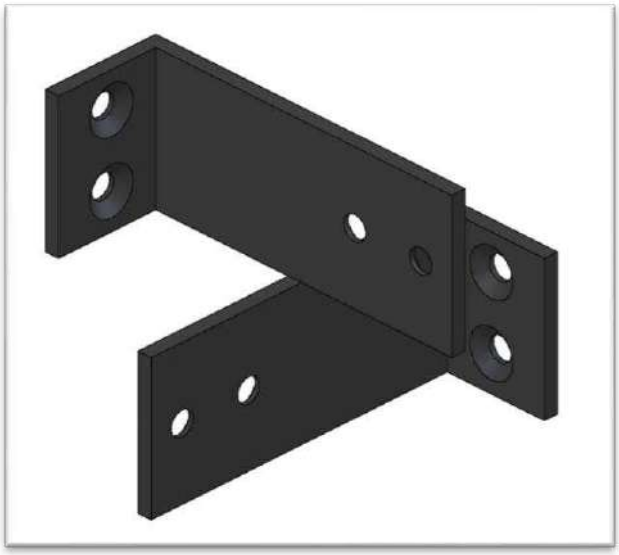

External Corner Brackets

External wrap around corners requires a blank corner batten and up to two external corner brackets at each mounting track position.

These are screw fixed to blank corner batten and then screw fixed to the last full batten on the external corner on either side and the

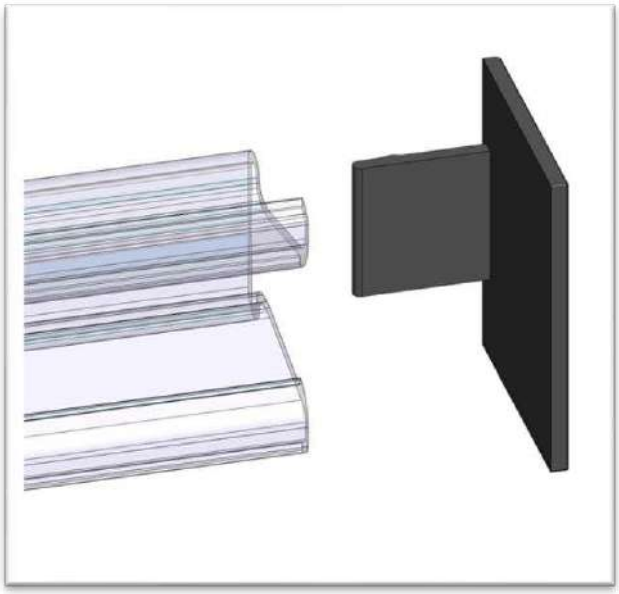

Mounting track (TCR) end caps

End caps are push-fit into the end of the mounting track and colour matched black. They are generally used on walls when the ends of the mounting tracks are visible. The end caps finish off with a clean flat end detail. Perfect for a high detail finish.

DATE: 04/10/24
JOB REF: 23060268-01
REVISION: A
CHECKED & APPROVED BY BREVITY LTD.
MATT BISHOP, CMENGNZ, CPENG
#243276
Brevity

Aluminum End cap

End caps accompany all of our aluminium and Ali/timber combo battens. Each end cap is powder coated to match the colour of the battens or wrapped in our wood finish option. Installation is simplified with a push-fit connection.

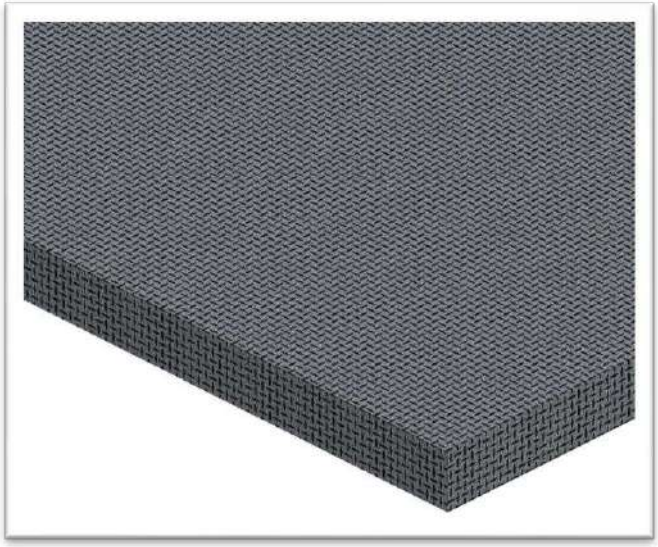

Acoustic 25mm backing

For interior applications, PET backing is provided, delivering excellent acoustic performance to enhance the overall environment. It is supplied in set widths to fit perfectly between the mounting tracks.

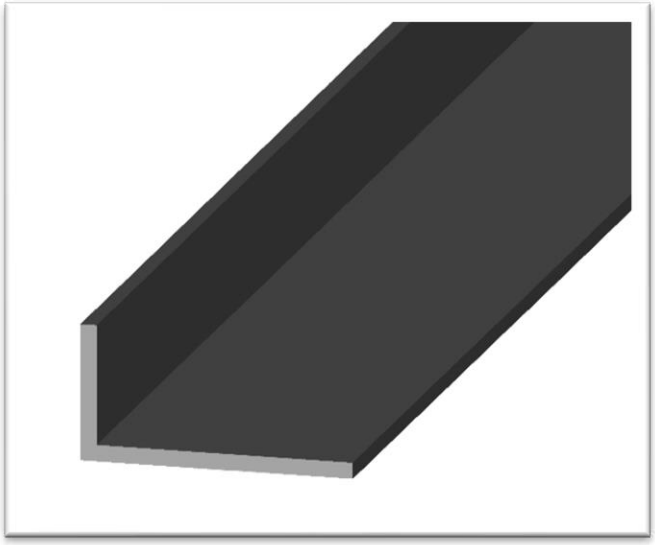

L profile

Provided as an anti-slip feature at the base of wall battens and for trimming around border penetrations to maintain cleanliness and tidiness. It can also serve to conceal exposed ends of battens and hide the groove in the back of the batten.

DATE: 04/10/24
JOB REF: 23060268-01
REVISION: A
CHECKED & APPROVED BY BREVITY LTD.
MATT BISHOP, CMENGNZ, CPENG
#243276
Brevity

Applications & Install Procedure

What is the process for Nacci Clip-In battens?

Our system allows two joining techniques, which allows for easy installation under any circumstance.

The first technique is to push the loose clip into the battens at desired TCR / track centres, the clip and track are designed with a large angle of engagement and smooth rounded contours so any in-accuracy is taken care of during positioning. Battens can also slide into position after install.

Once your battens have clips located in the back t-slot, they can be clipped into place into the TCR mounting track by pushing the batten into the track, press firmly until a click is heard. Make sure all the clips are firmly clicked in place in both the batten and the track.

Once the first batten is installed the Spacers are also clipped into the track and firmly pushed next to the batten. Proceeding batten then clip until the area is covered.

The Second Technique during is the same as the first, however during the action the loose clips are pressed into the TCR mounting track first, the standalone batten is then positioned over the clips onto the track and pushed firmly until clipped into place.

There are benefits of using both options for different scenarios and depending on the job it is up to the installer which will benefit them.

1st Technique Action – Clips into batten

Place the batten on a flat surface and then push the Clip into batten by directly pressing on the back face of the clip until the clip snaps into place in the t-slot groove of the batten. A rubber mallet can be used to assist if required.

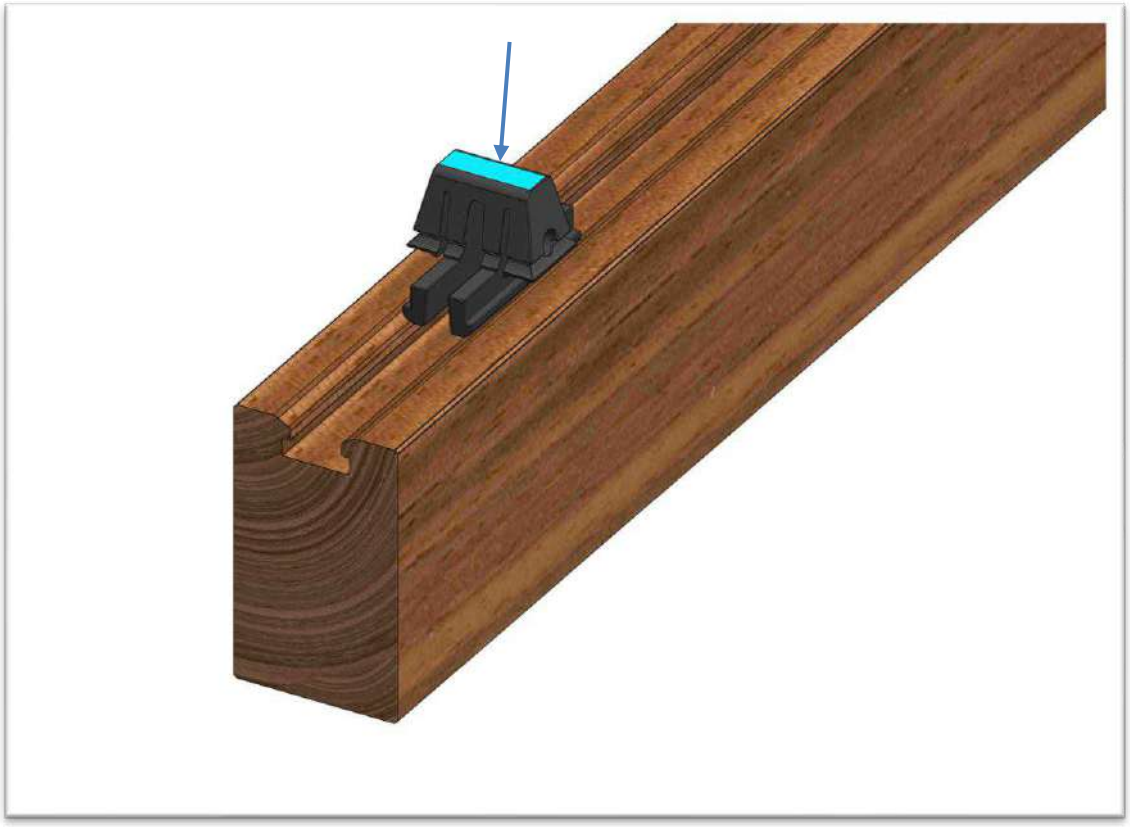

1st Technique Action – Batten with clip into mounting track (TCR)

Push the batten with inserted clip into Mounting track (TCR), directly press on the face of the batten until the clip snaps into place into the mounting track (TCR).

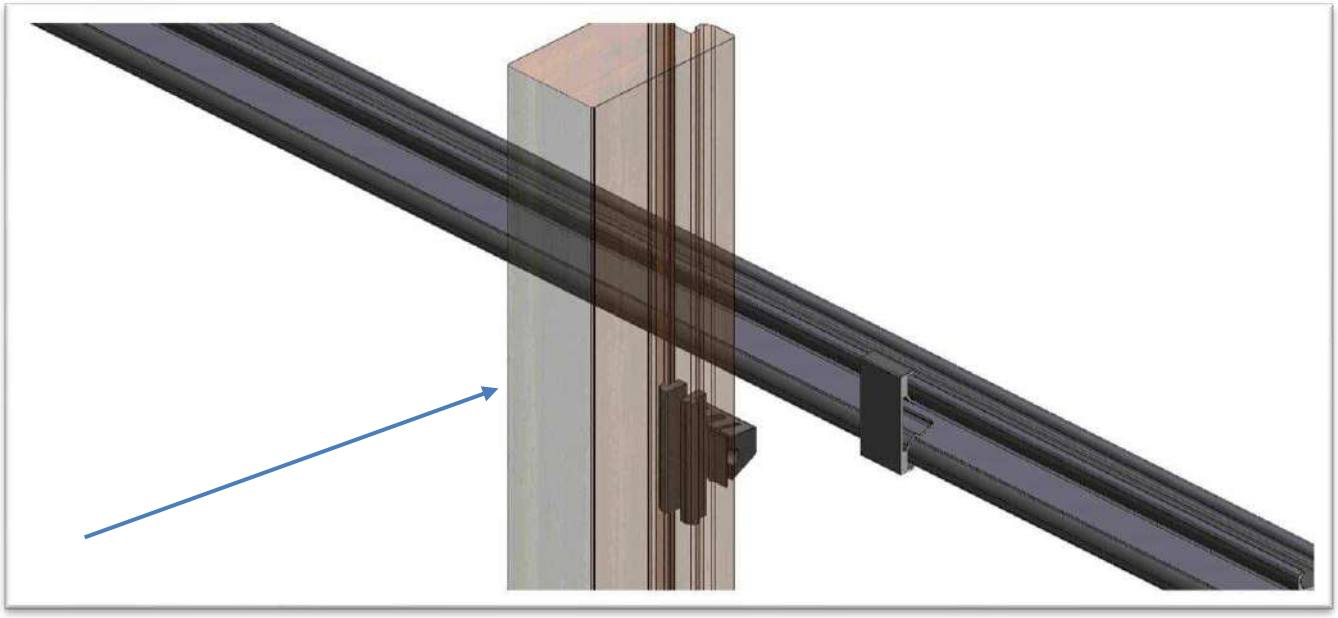

1st & 2nd Technique Action – Batten spacer into mounting track (TCR)

Push the Spacer into Mounting track (TCR), directly press on the face of the Spacer until the spacer snaps into place, then slide firmly against pre placed batten.

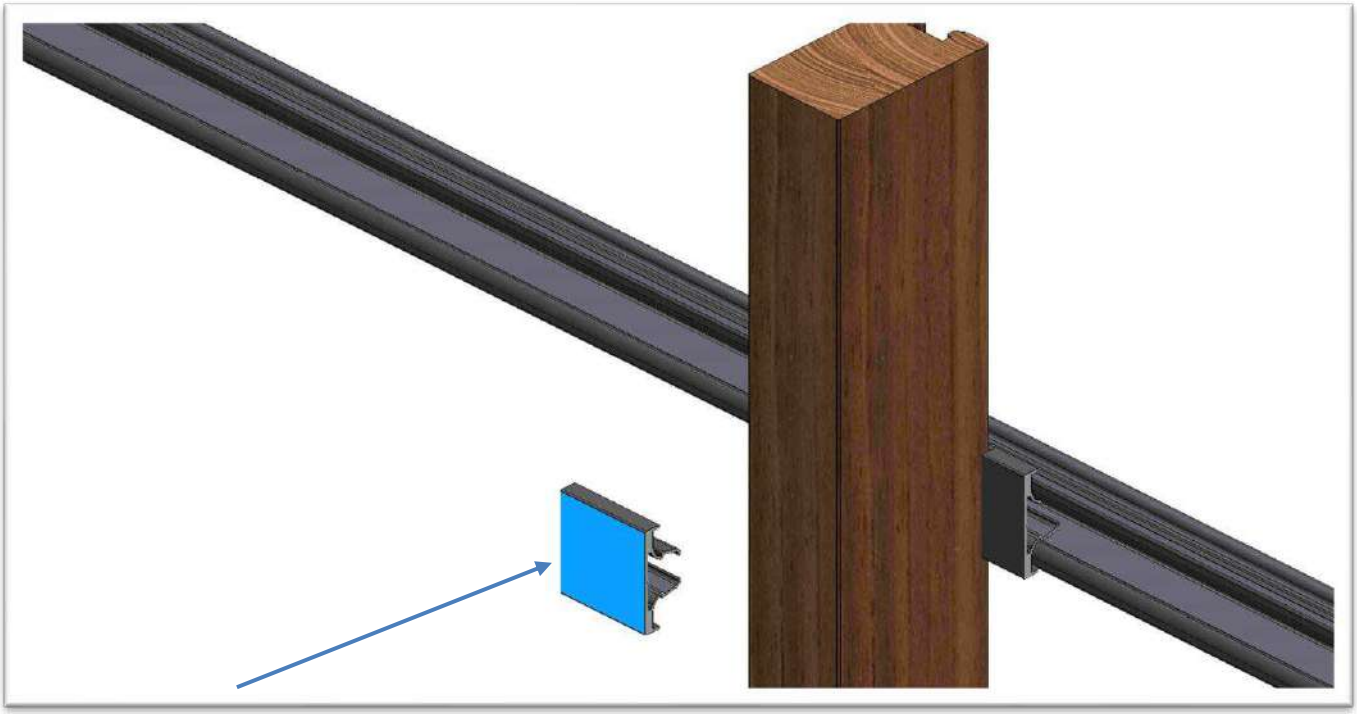

DATE: 04/10/24
JOB REF: 23060268-01
REVISION: A
CHECKED & APPROVED BY BREVITY LTD.
MATT BISHOP, CMENGNZ, CPENG
#243276
Brevity

2nd Technique Action – Batten Clip into mounting track (TCR)

Push the Clip into Mounting track (TCR), directly press on the face of the clip until the clip snaps into place.

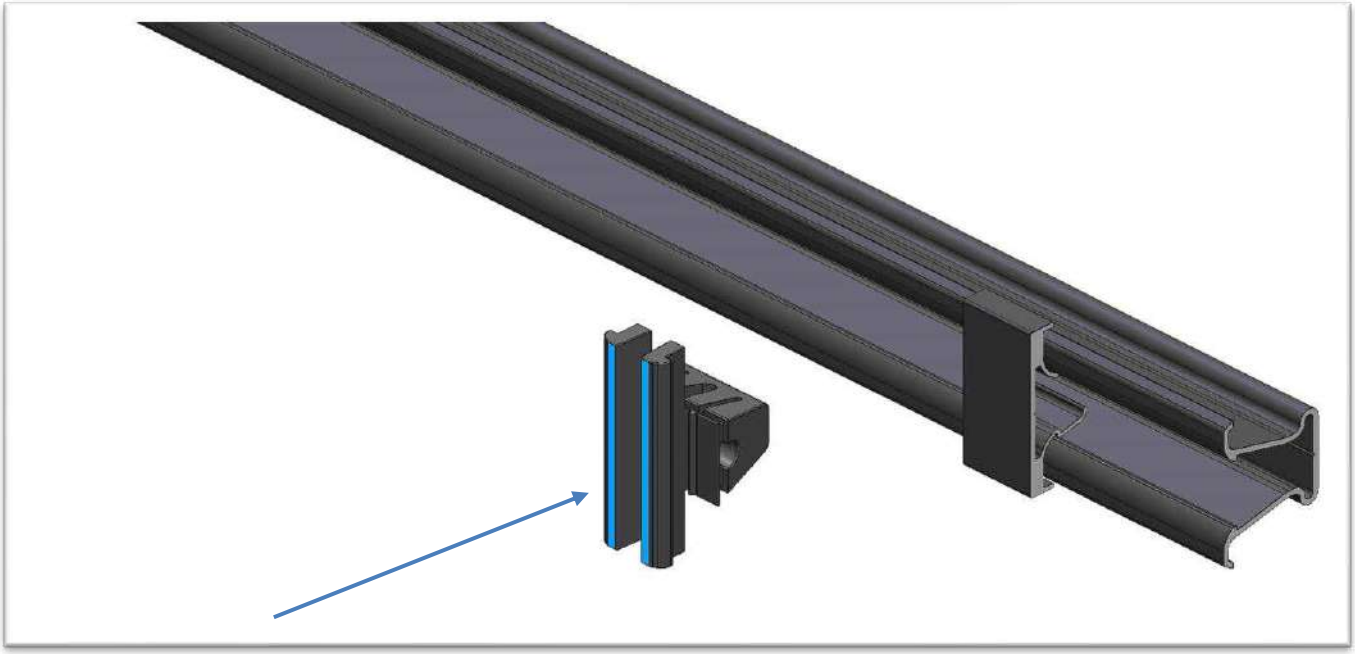

2nd Technique Action – Bare batten into mounting track (TCR) with clips

Line the batten t slot up with the mounted clips, position either batten T slot edge with the face of the mounting track and the other T-slot edge with the edge of the clip, press the batten over to one side and Inwards so it compresses the clip and snaps into place in the back of the batten. Alternatively press on the batten directly perpendicular to the track and press into the clip until it snaps into place. (A dead blow soft hammer can be used carefully if required)

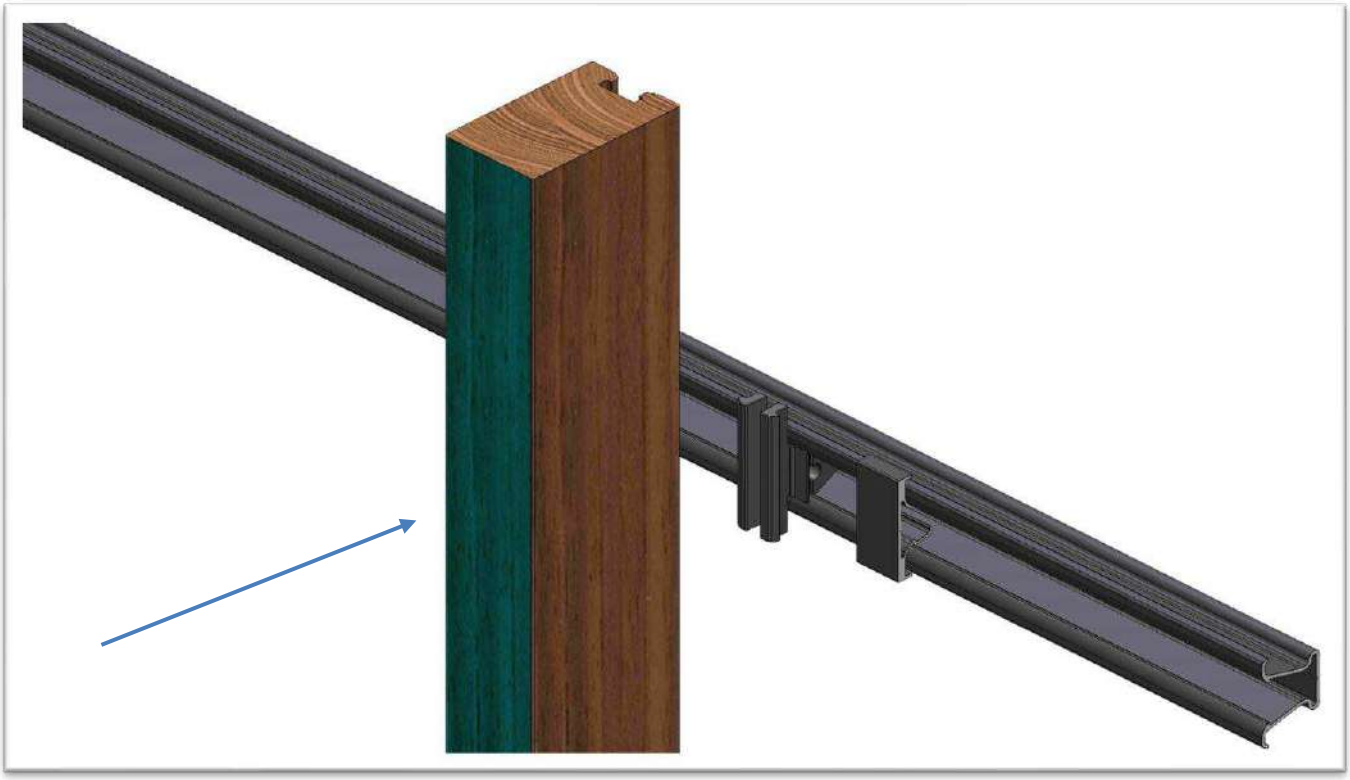

DATE: 04/10/24
JOB REF: 23060268-01
REVISION: A
CHECKED & APPROVED BY BREVITY LTD.
MATT BISHOP, CMENGNZ, CPENG
#243276
Brevity

Suspended Ceilings application

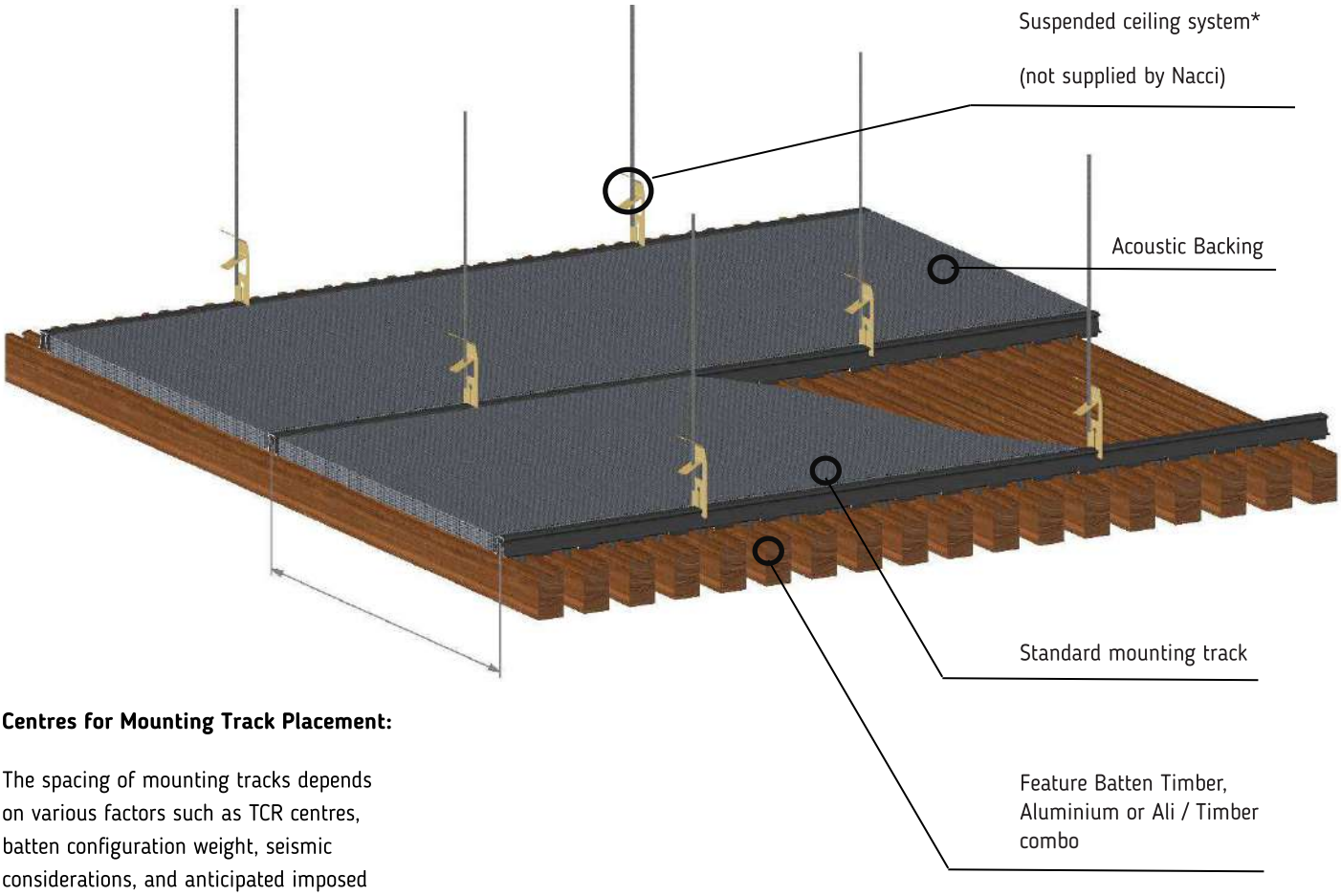

Centres for Mounting Track Placement:

The spacing of mounting tracks depends on various factors such as TCR centres, batten configuration weight, seismic considerations, and anticipated imposed loads, all of which are specific to each project. It is crucial to consult with your engineer before installation, in conjunction with our product technical datasheet, to determine the appropriate spacing for your project's requirements. Guidance from your project engineer to ensure appropriate spacing based on specific project requirements.

The spacing of hangers/TCRs is contingent upon the weight of the selected batten configuration and project-specific engineering criteria. We recommend seeking guidance from your suspended ceiling system provider for additional information.

Standard mounting track specs

32mm wide x 25mm deep

Aluminium extrusion

Standard 3.6m lengths & 4.8m lengths

Anodized 20 micron matt black

DATE: 04/10/24
JOB REF: 23060268-01
REVISION: A
CHECKED & APPROVED BY BREVITY LTD.
MATT BISHOP, CMENGNZ, CPENG
#243276
Brevity

Considerations of Set Out:

1. Review the architectural reflected ceiling plans to identify fixed points, edges, and penetrations. These elements must be incorporated into the ceiling layout to ensure they align with the batten sequence. Note that in some cases, penetrations can be adjusted or detailed differently to suit. Consider structural compensation and building movement during the design phase.

2. Determine a point of reference in the space, such as a long wall or bulkhead, to establish parallel alignment for the battens. Address any inherent inaccuracies in the space, such as walls out of parallel, as necessary.

3. Create a datum line, using a string or laser, to ensure perfect alignment of all mounting tracks and clips. The datum line should also align with sequence increments running off fixed points like bulkheads.

4. For aesthetic edge details, it's recommended to start and finish with equal spacing from the last batten. Consider this when deciding where to begin and how sequence measurements correspond to the room width.

5. If multiple batten profiles are involved in a sequence, ensure symmetry by starting from the middle and working outward. This may require resizing edge battens.

6. Sketch the set-out of mounting tracks on the reflected ceiling plan, ensuring alignment with the project engineer-verified shop drawings. Track centres typically range from 600mm for timber to 1200mm for aluminium. Perimeter gaps should be maintained for floating ceilings or back-braced designs, with gap size determined by site-specific engineering considerations as per AS/NZ 2785:2020. Consult with your suspended ceiling provider for acceptable back bracing detailing.

2. Installing Suspension System:

- Install top cross rails (TCR) from hangers, positioned perpendicular to the direction of the feature battens. Consult your suspended ceiling supplier for specific TCR and hanger spacing based on project requirements. Ensure each Nacci track has a minimum of three ceiling clip connections to the TCR.

3. Installing Tracks and Battens:

- Align the clips with the datum line and any fixed points, working systematically from one side to the other. If there's a bulkhead corner profile, begin installation from this point.

DATE: 04/10/24
JOB REF: 23060268-01
REVISION: A
CHECKED & APPROVED BY BREVITY LTD.
MATT BISHOP, CMENGNZ, CPENG
#243276
Brevity

4. TCR / Mounting Track Centres:

The spacing of top cross rails (TCR) is contingent upon various factors including the weight per square meter of the system, internal wind pressures, seismic requirements, and service loads. It is imperative to collaborate with the project engineer to ascertain the appropriate TCR centres before proceeding with installation.

- Consider the weight of the suspended ceiling elements and other imposed loads, including seismic loads, when determining TCR centres.
- Install all services and penetration items to a level.
- Insert acoustic backing in between mounting tracks.
- Install corner profiles as necessary.

Note:

- When installing battens, ensure the clip aligns with the groove in the centre of the batten. Starting from one side and working across. Leave gaps around penetrations.
- Join battens using provided batten joiners, except for end battens which should be joined on a clip due to required travel. If space is limited for using the joiner strip, battens can be joined on a clip.

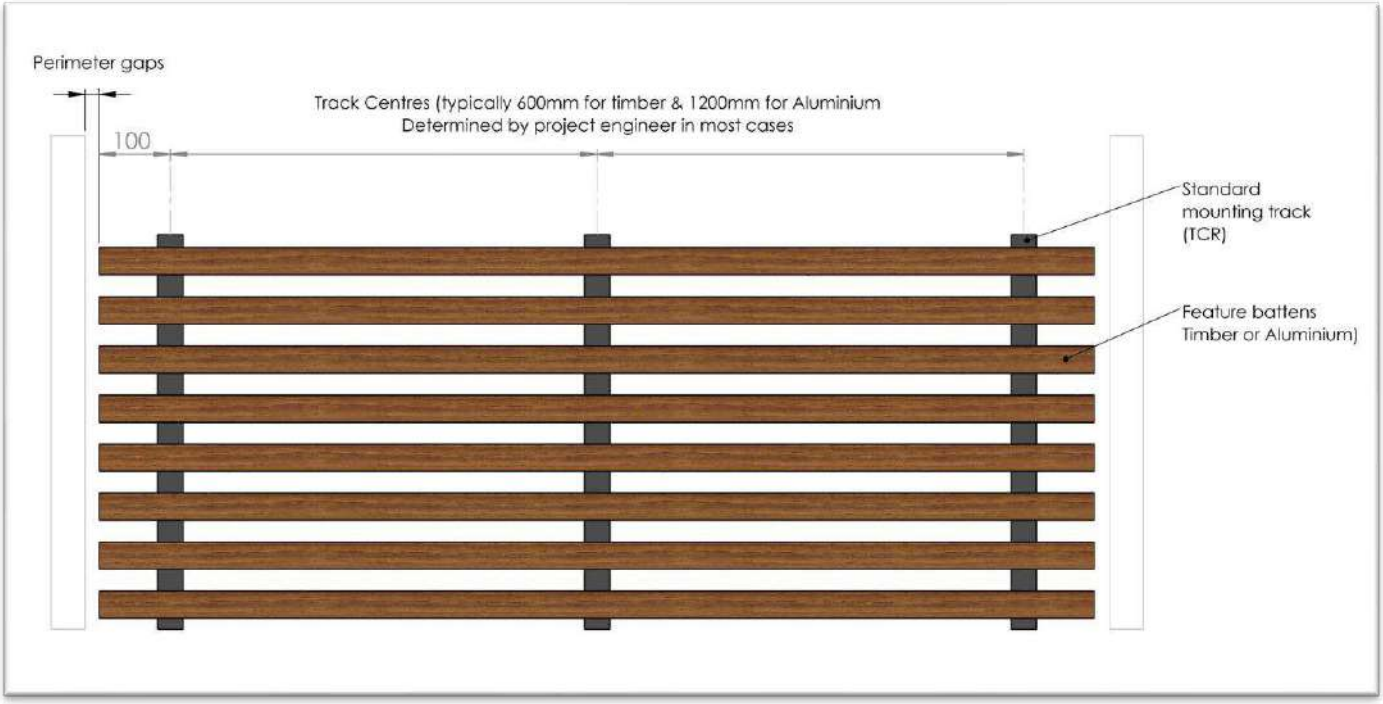

DATE: 04/10/24
JOB REF: 23060268-01
REVISION: A
CHECKED & APPROVED BY BREVITY LTD.
MATT BISHOP, CMENGNZ, CPENG
#243276
Brevity

Walls application

Typical stud wall
(Maximum stud centres 600mm)

Centres for Mounting Track Placement:

In interior environments, the standard spacing for mounting tracks is usually 600mm when using timber battens with stud centres of 600mm or less. For exterior applications, additional load considerations, particularly those influenced by wind, necessitate adjustments to mounting track centres. Please refer to our product technical datasheet and seek guidance

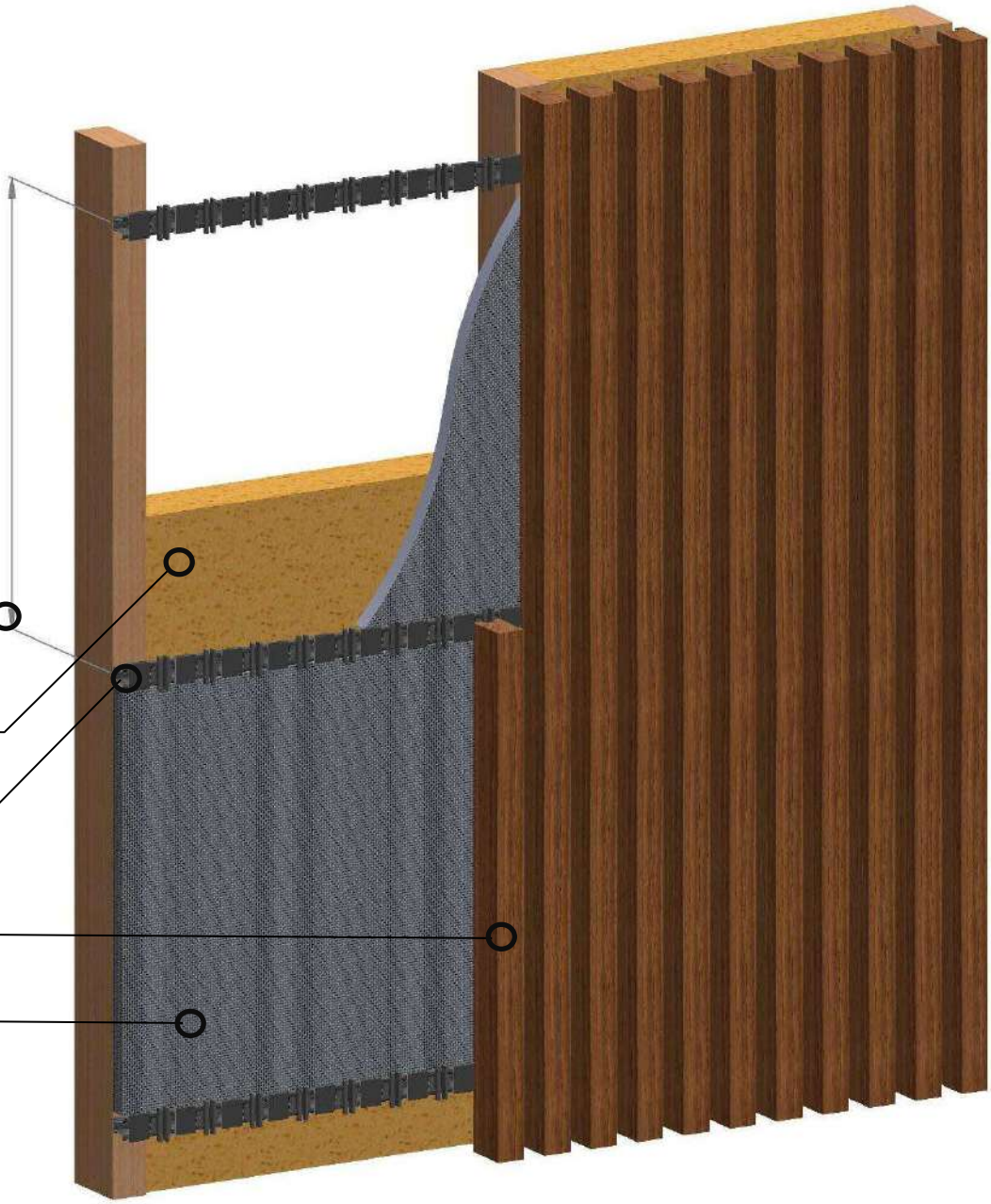

Standard mounting track specs

32mm wide x 25mm deep

Aluminium extrusion

Standard 3.6m lengths & 4.8m lengths

Anodized 20 micron matt black

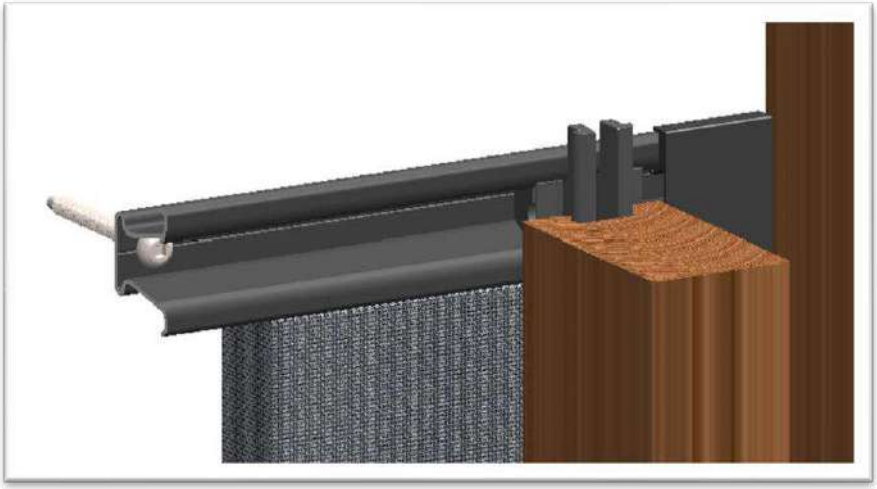

DATE: 04/10/24
JOB REF: 23060268-01
REVISION: A
CHECKED & APPROVED BY BREVITY LTD.
MATT BISHOP, CMENGNZ, CPENG
#243276
Brevity

Direct fix Ceilings / soffits application

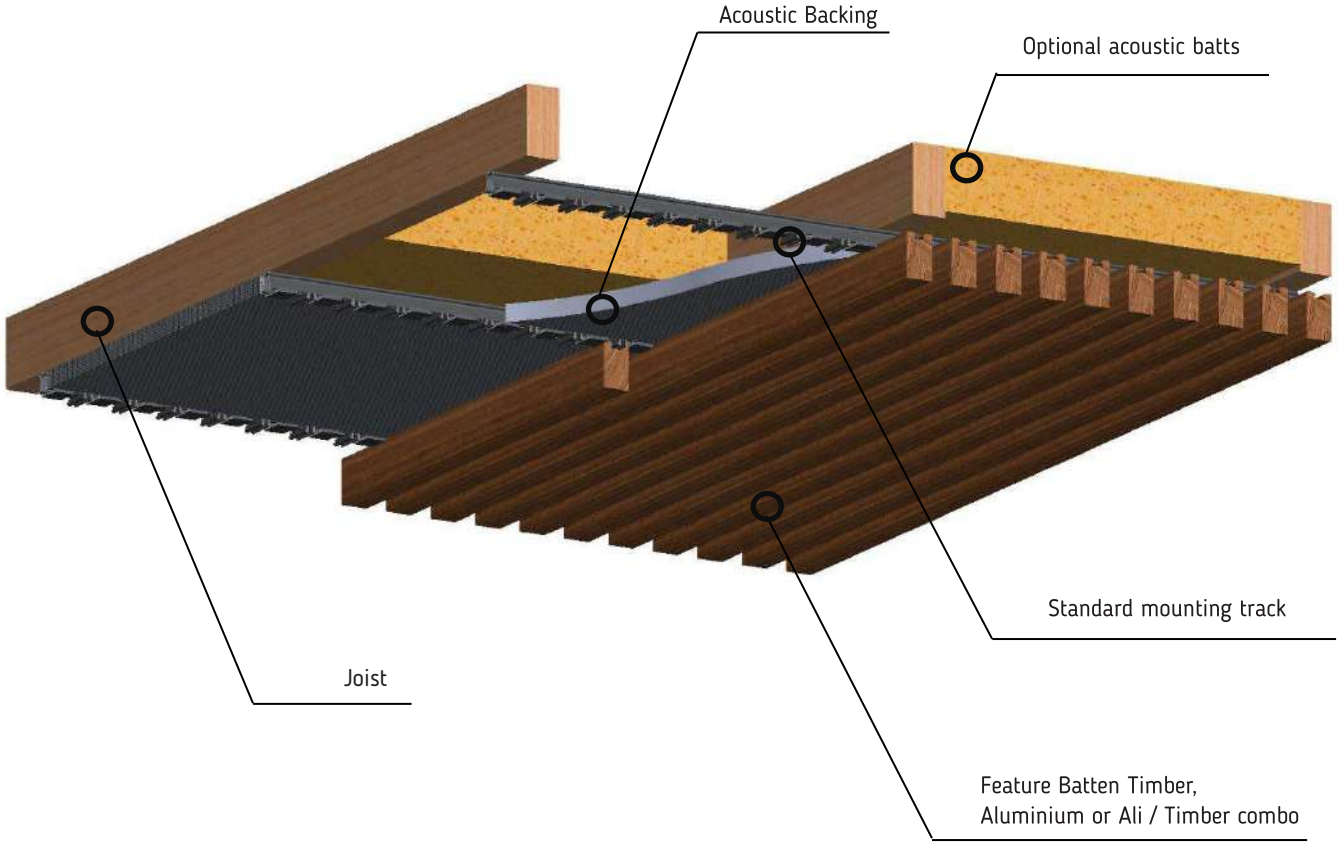

Centres for Mounting Track Placement:

Mounting track centres are determined by stud centres, batten configuration weight, and anticipated imposed loads. Please refer to project-specific engineering and shop drawings, as well as our product technical datasheet, for accurate guidance.

Standard mounting track specs

32mm wide x 25mm deep

Aluminium extrusion

Standard 3.6m lengths & 4.8m lengths

Anodized 20 micron matt black

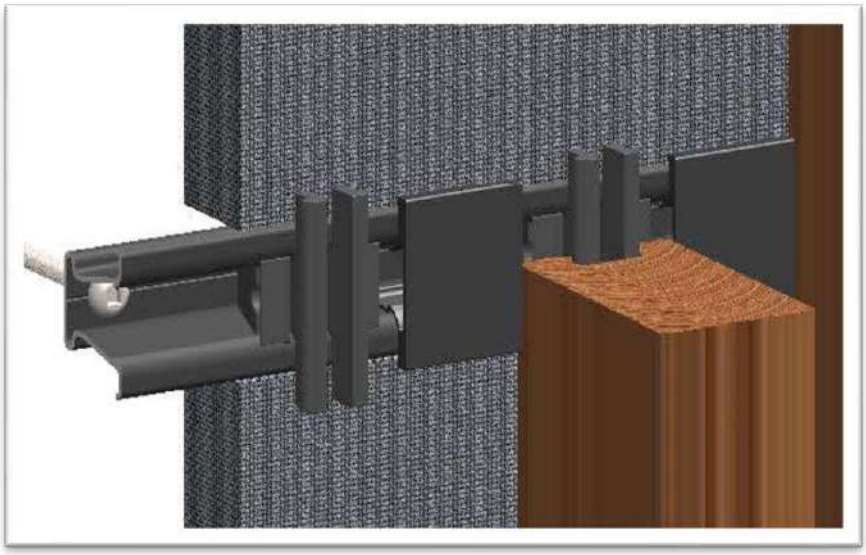

DATE: 04/10/24
JOB REF: 23060268-01
REVISION: A
CHECKED & APPROVED BY BREVITY LTD.
MATT BISHOP, CMENGNZ, CPENG
#243276
Brevity

Walls & Direct fix ceiling Install procedure

1. **Considerations of Set Out:**

   Review the architectural plans to identify fixed points, edges, and penetrations, which should be incorporated into the batten sequence layout. Note that in some cases, penetrations can be adjusted or detailed differently to accommodate the layout. Structural compensation might be necessary for such adjustments, and building movement should also be considered during the design verification stage.

2. **Substrate Check:**

   Before installation, ensure that the base substrate is plumb and straight, running in the same direction as the intended batten alignment. If not aligned, install 70x35mm pine framing battens or top hats perpendicular to the mounting tracks. In cases where studs are more than 450mm apart or the installation area may face potential impact, additional support might be needed.

3. **Mounting Track Set Out:**

   For track fixings details we recommend fixing at 450 centres minimum and at a minimum of 100mm from each end. For timber substrate use a 10Gx50mm pan head screw into every timber stud. For Concrete substrate use a HILTI HUS-3 M6x40mm & for Metal substrates use a 10G TEK screw. As Jobs may vary, verification of fixing details and loads by a project engineer may be required.

   For vertical battens, start by fitting the L-profile trim at the required height to serve as a base for the battens, preventing slippage. The first mounting track should be installed approximately 100mm from the L-profile trim or the end of battens. Subsequent tracks should be installed at specified centres, determined during design verification by the project engineer. Acoustic backing can then be installed, cut to size and secured.

4. **Installing the Battens:**

   When installing battens, consider aesthetics and start and finish with an equal space from the last batten. Pay attention to edge details and penetrations for proper alignment. Battens should be installed using a dead blow hammer or white rubber mallet, tapping lightly at the clip to ensure a secure connection against the track. Use batten joiners to connect battens, staggering the joins randomly for visual appeal. If removal is necessary, utilize the removal tool to safely disengage the battens from the mounting track.

Curved Ceiling's & Walls.

For Curved Ceilings Nacci can supply a custom curved TCR track with either convex or concave curvature and generally a minimum 1.5m Radius. Custom drawings and manufacturing to suit project requirements.

For Curved Walls the direct fix track is used and mounted as directly in position for each batten. Track's must be pre aligned and spaced to suit curves but give maximum amount of flexibility during install.

Please contact office@nacci.co.nz for supporting reference drawings or design integration guidance for your project.

DATE: 04/10/24
JOB REF: 23060268-01
REVISION: A
CHECKED & APPROVED BY BREVITY LTD.
MATT BISHOP, CMENGNZ, CPENG
#243276

Seismic Bracing details

NACCI TIMBER SYSTEMS - TIMBER & ALUMINIUM BATTEN SEISMIC CONCEPT SET-OUT

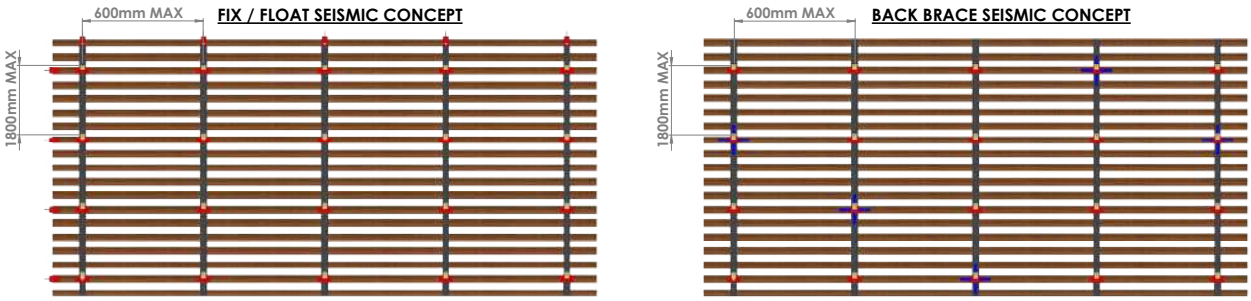

1 - ESTIMATED CAPACITY OF 36KG HORIZONTALLY

2. - PROJECTS REQUIRE SPECIFIC ENGINEERING DETAIL

TOP HAT BRACKET - MULTI FIXING

BACK BRACE (RONDO GRIDLOCK OR SIMILAR)

ANGLE BRACKET - PERIMITER FIXING

WALL FIXINGS

FIXING @ EVERY TCR

10Gx50 WOOD SCREW (TIMBER WALL/COLUMN)

10G TEK SCREW (METAL WALL/COLUMN)

HILTI HUS-3 M6x40 (CONCRETE WALL/COLUMN)

FIX @ 1800mm CNTRS

10Gx50 WOOD SCREW (TIMBER WALL/COLUMN)

10G TEK SCREW (METAL WALL/COLUMN)

HILTI HUS-3 M6x40 (CONCRETE WALL/COLUMN)

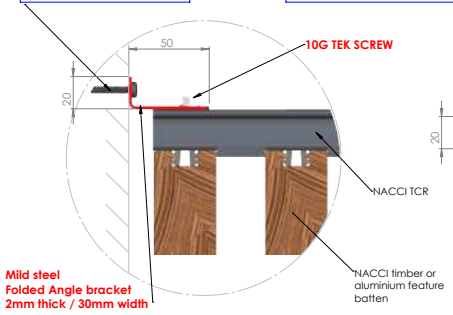

DETAIL 1: TCR FIXED EDGE

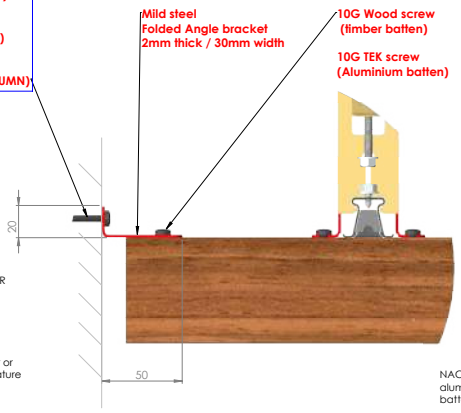

DETAIL 2: TIMBER BATTEN FIXED EDGE

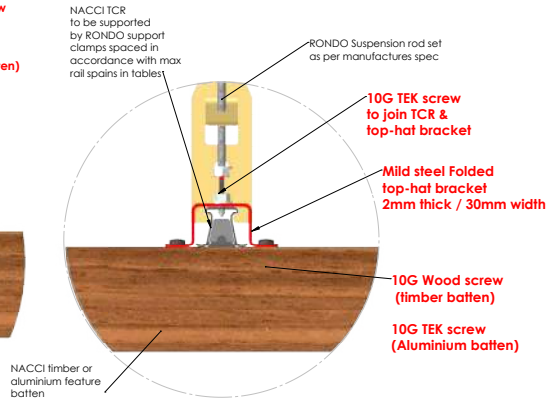

DETAIL 3: TOP HAT BRACKET

DATE: 04/10/24
JOB REF: 23060268-01
REVISION: A
CHECKED & APPROVED BY BREVITY LTD.
MATT BISHOP, CMENGNZ, CPENG
#243276
Brevity

Clip-In batten details

Anti slip L profile trim detail:

Provided as an anti-slip feature at the base of wall battens and for trimming around border penetrations to maintain cleanliness and tidiness. It can also serve to conceal exposed ends of battens and hide the groove in the back of the batten.

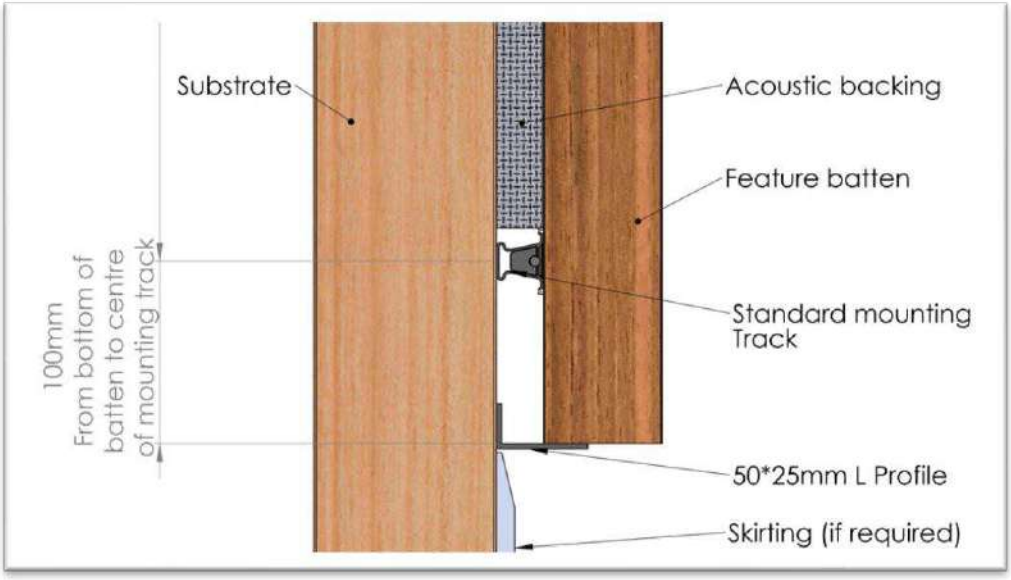

Anti slip Hidden detail:

The hidden anti slip detail is used as an alternative to the L profile, great when a fully hidden detail is required.
A batten joiner is fixed to the batten flush with the top, this distance then sets the position for the first mounting track to be 100mm from the top of the batten. This provides a datum reference so all the battens can hang at the same height flush at the top. The batten joiner is fixed in place to the batten and stops on the first clip.

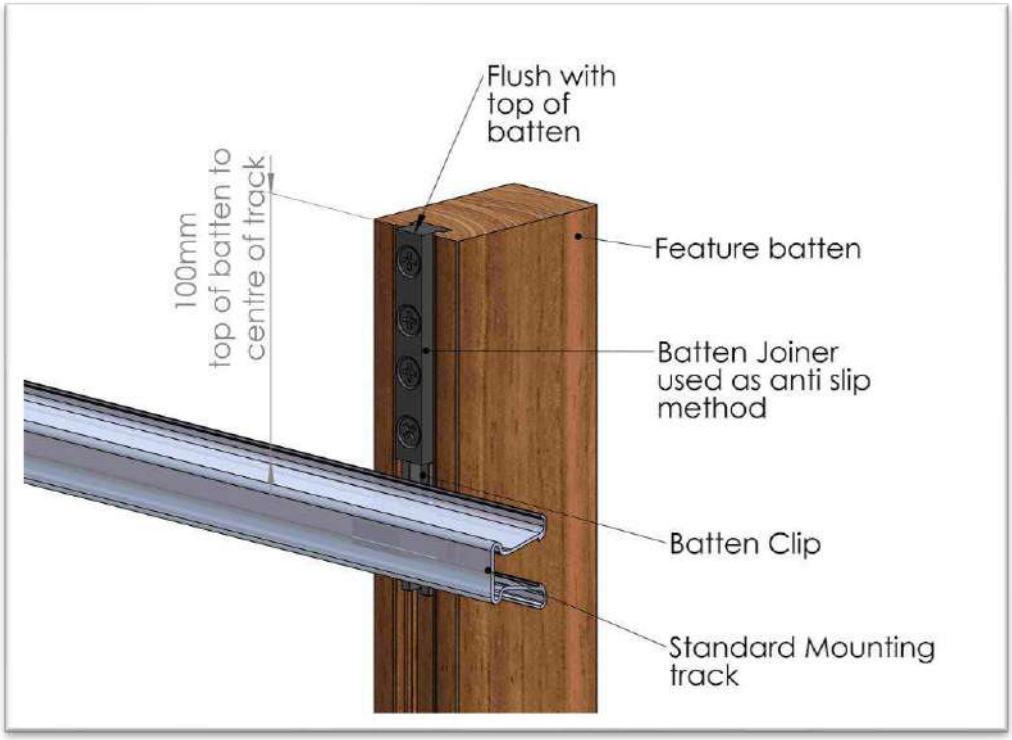

DATE: 04/10/24
JOB REF: 23060268-01
REVISION: A
CHECKED & APPROVED BY BREVITY LTD.
MATT BISHOP, CMENGNZ, CPENG
#243276
Brevity

External Corner In-fill

To install an external corner:

Mitre the mounting track ends to 90 degrees.

After installing your mitered track, install clips, battens and spacers on one side of the mitered track.

Use enough Angle brackets to support the DAR corner in-fill batten, first screw fix to the batten & then mount and screw the corner in fill in place with equal spacing.

The next batten on the other side is then clipped into place using the normal techniques.

The angle brackets are powder coated black so they blend into space behind the battens.

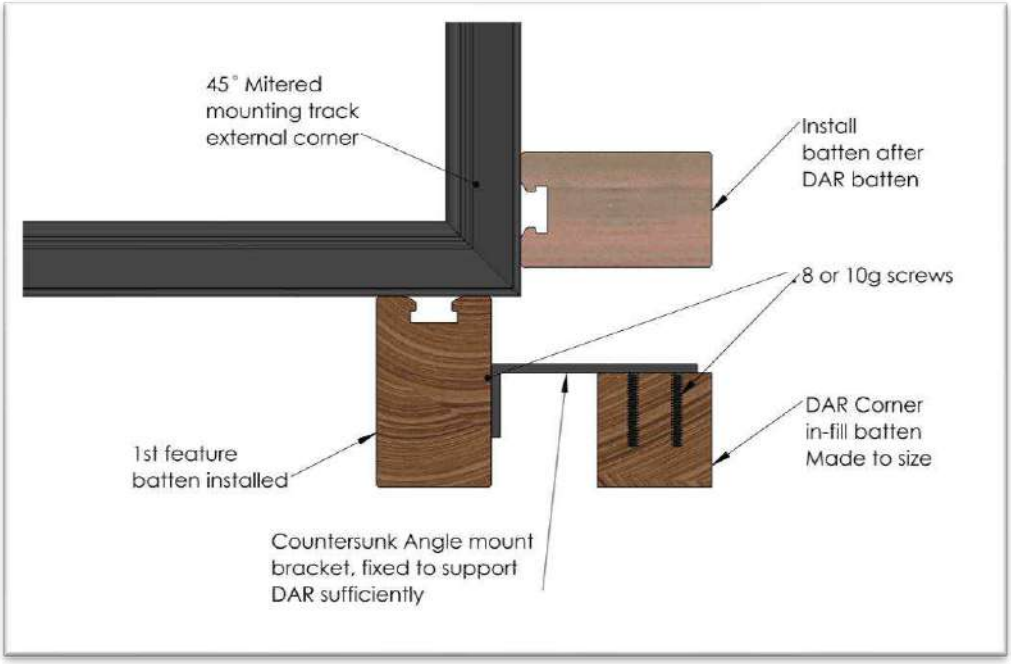

Internal Corner

Internal corners only require a mitered mounting track and standard mounting practices and batten spacing's exist. No Angle brackets required.

Start the install procedure from the internal corner and consider space from the inside edge for a clip on each side.

DATE: 04/10/24
JOB REF: 23060268-01
REVISION: A
CHECKED & APPROVED BY BREVITY LTD.
MATT BISHOP, CMENGNZ, CPENG
#243276
Brevity

Access Panels

Locating the Hatch on Reflected Ceiling Plan:

1. Review the reflected ceiling plan to determine the desired location of the access hatch.

2. Ensure that the placement of the hatch aligns with the Nacci's system's self-supporting design, without additional loads.

TCR (mounting track) Rail Spacings:

3. As per the Project engineer's TCR spacings, set your hatch in this area. The length of the hatch in-line with the TCR's can be to a desired length / batten number.

Hanging the Lock-in TCR Rails:

4. Hang the cut to size TCR rails approximately 50mm away from the edge of the designated access hatch area.

Constructing the Hatch:

5. Assemble the hatch using at least two TRC rail lengths cut to size, make sure the TCR tracks overhang past the next fixed batten outside the hatch perimeter. Cut the timber battens to fit within the assembled perimeter, ensuring a 5mm clearance on all ends. Assemble the hatch with the same process as the rest of the ceiling using the batten clips and spacers to set the batten centres. Use the Spacer adjustment tool to adjust the spacers so they can firmly lock the battens in position on the TCR tracks.

Then Install a drop in batten joiner on each corner of the hatch in the battens, as per image below. This allows the accurate batten alignment between the hatch and the existing batten structure.

We also recommend to screw fix the cut TCR tracks from the back into the hatch battens on the end battens using a 10G x 50mm pan head screw.

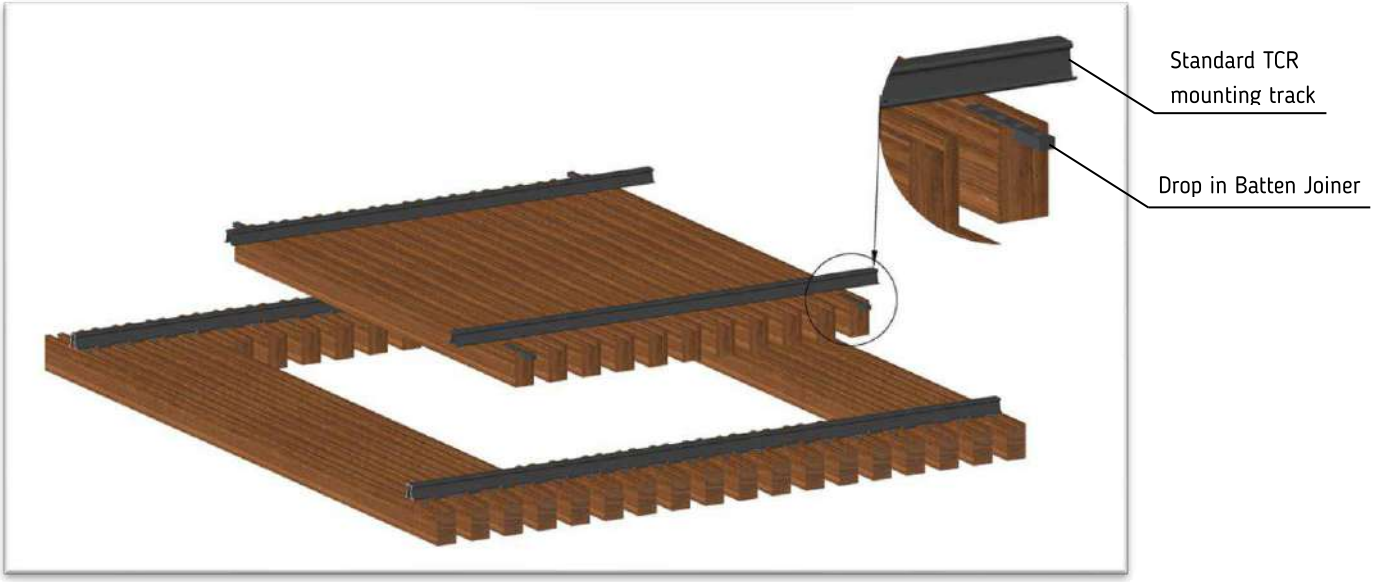

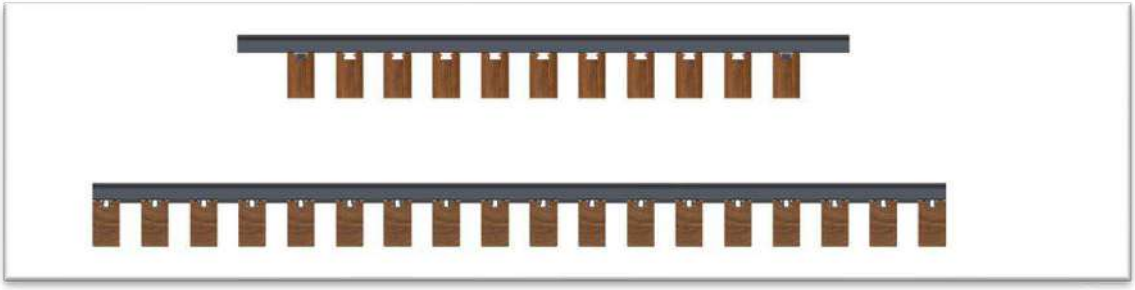

DATE: 04/10/24
JOB REF: 23060268-01
REVISION: A
CHECKED & APPROVED BY BREVITY LTD.
MATT BISHOP, CMENGNZ, CPENG
#243276
Brevity

Hinged Door & Pivot Door

1. Locating the Door:

- Determine the precise location of the door, considering any existing penetrations and the planned sequence of the battens.
- Ensure that the door's placement aligns with the intended aesthetic and functional layout of the space, taking into account the visual flow of the battens.

2. Installing the Hinge Door:

- Follow standard installation procedures to install the door.
- Ensure that the pivot point of the hinge is positioned slightly outward, proud of the face of the battens.
- This positioning allows the door to open and close smoothly without interfering with the surrounding battens, maintaining both functionality and aesthetic coherence.

3. Installing the pivot door:

- Position the pivot point of the door correctly, taking into account the clearance needed for the battens.
- Ensure that the pivot point allows the door to swing open and close freely without obstructing or damaging the surrounding battens.
- Adjust the pivot point as needed to achieve the desired clearance and functionality.

Please contact office@nacci.co.nz for supporting reference drawings or design integration guidance for your project.

DATE: 04/10/24
JOB REF: 23060268-01
REVISION: A
CHECKED & APPROVED BY BREVITY LTD.
MATT BISHOP, CMENGNZ, CPENG
#243276
Brevity

Ceiling penetrations

1. Marking Ceiling Penetrations:

- Begin by marking out the precise locations where ceiling penetrations will be situated, ensuring alignment with the established batten sequence.

2. Cutting Battens:

- Cut the battens to the required lengths to accommodate the marked penetrations while maintaining the desired batten sequence.

3. Installing Cut Battens:

- Install the cut battens around the penetrations, ensuring they fit snugly and align properly within the established sequence.
- Additional lengths of mounting track may be necessary to provide support for the cut battens, depending on the specific installation requirements.
- Utilize L-profile trim, if applicable, to cover the cut ends of battens and provide a clean, finished appearance.

4. Locating or Installing Penetrations:

- Once the cut battens are in place, proceed to locate or install the designated penetrations in accordance with the project specifications and requirements. Ensure proper alignment and secure installation to maintain the integrity of the ceiling system.

DATE: 04/10/24
JOB REF: 23060268-01
REVISION: A
CHECKED & APPROVED BY BREVITY LTD.
MATT BISHOP, CMENGNZ, CPENG
#243276
Brevity

Wall penetrations

1. Locating the Penetration:

- Identify and mark the precise area where the penetration will be located, ensuring it aligns with the project requirements and design specifications.

2. Integration with Batten Sequence and Pre-run Wires:

- Confirm that the chosen location for the penetration harmonizes with the planned sequence of battens.
- Consider any pre-run wires or other elements within the substrate to avoid interference or conflicts during installation.

3. Penetration Installation:

- Install the penetration according to industry standards and best practices.
- Ensure proper sealing and reinforcement to maintain the integrity of the substrate and to prevent any potential issues such as leaks or structural weaknesses.
- For rebated / flush to front objects use a router to cut out the necessary section of the wall before install.

DATE: 04/10/24
JOB REF: 23060268-01
REVISION: A
CHECKED & APPROVED BY BREVITY LTD.
MATT BISHOP, CMENGNZ, CPENG
#243276
Brevity

Batten Removal or Replacement

Nacci Clip-In battens have been designed with the ability to be removed if required, usually battens are removed to replace damaged battens, additional works on a project or adjustments.

Batten Removal Process:

1. **Prepare Removal Tools:**
   - Insert the tip of the removal tool into the throat of the mounting track, positioning them as close as possible to the batten slated for removal. For wider battens (>50mm), utilize a second removal tool on the opposite side to facilitate easier removal.
2. **Lock Removal Tool:**
   - Push on the top edge of the removal tool, this action acts like a lever on the track and widens the throat sufficiently to remove the clip without causing damage to the track. The clip will remain engaged with the batten, allowing both to be removed together.
3. **Remove Batten:**
   - Pull the batten to disengage it from the track. As the batten is removed, release the removal tool to enable the track to revert to its original shape. Note that this action may potentially damage the track. If damage occurs, use pliers to gently bend it back into position, or replace track as necessary.
4. **Progress Along the Batten:**
   - Proceed to work along the length of the batten from one end to the other, disengaging and removing each clip sequentially. This method ensures systematic removal of the battens without causing unnecessary damage to the track or surrounding components.

DATE: 04/10/24
JOB REF: 23060268-01
REVISION: A
CHECKED & APPROVED BY BREVITY LTD.
MATT BISHOP, CMENGNZ, CPENG
#243276
Brevity

Nacci LED light Battens

Nacci have developed a L.E.D light batten to fit all of our standard feature battens. They are uniquely mounted in-line with timber or aluminium battens with our standard batten joiners for quick and effective install.

For installation, it's essential to engage a licensed electrician and refer to the circuit diagram on the following page as a helpful reference guide.

The perfect finish to a master-class project, our battens are so seamless and elegant and do not encroach on the linear lines of the product.

LED Package:

4x 1m LED Batten Light in desired size & material

1x 240w driver

1x 4-way adapter

1 x 3m Connection wire 10 amp

1 x 6m Connection wire 10 amp

2 x 9m Connection wire 10 amp

Generic table guide for lighting strengths and distances

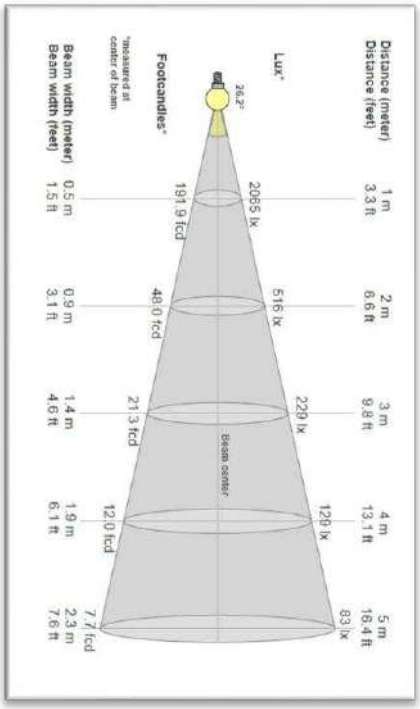

Residential Property			Commercial Property		
ROOM	LUX LEVEL*	RECOM-MENDED SPACING	ROOM	LUX LEVEL*	RECOM-MENDED SPACING
Alfresco	70	2.5m	Classrooms	240	2m
Bathroom - General	150	1.5m	Electrical - Jewellery work	800	0.75m
Bathroom - Vanity Basin	500	1m	Entrance Halls - Foyers	160	2m**
Bedroom - General	150	2m	General - Office General	100	2m
Bedroom - Dressing Area	300	1.8m	General - Office Desks	320	1.8m
Dining Room - General	100	2m	Hallways	40	2-2.5m
Dining Room - Dining table	200	2m	High tolerance work stations	600	1.8m
Hallways	40	2-2.5m	Hospital treatment rooms	400	1.5m
Kitchen - General	300	2m	Laboratories	360	1.8m
Kitchen Bench - Task Area	600	1m	Stairs - First Story Roof to Ground Floor	80	1m
Laundry	300	1.8m	Stairs Landing	80	1m
Stairs - First Story Roof to Ground Floor	80	1m	Toilet Cubicles	40	2-2.5m
Stairs - Landing	80	1m			
Study - General	100	2m			
Study - Desk	320	1.5m			
Theatre Room	100	2m			

DATE: 04/10/24
JOB REF: 23060268-01
REVISION: A
CHECKED & APPROVED BY BREVITY LTD.
MATT BISHOP, CMENGNZ, CPENG
#243276
Brevity

Specifications:

Material: Aluminium & Timber as per matching battens

LED strip: Neutral White (4000K) (available in cool or warm white on request)

Wattage: 38.4W per light (24v)

Driver power supply: 240v AC - 24V 6.25A 150W DC

IP rating: IP20 – out of weather

Brightness: 3300 Lumens each 1m light – to compare, a 100W **incandescent** lightbulb is approx. 1200-1400 Lumens

Installation instruction requirements:

1. Before installation, ensure that the lineal lighting strips are completely unpackaged.
2. Avoid installing insulation over the light fittings or driver to maintain clear ventilation for cooling.
3. Use only the designated clips provided with the fittings to secure them to the batten provided.
4. Maintain a minimum distance of 30mm between fittings.
5. Electrician must supply power through a 240V 10 amp plug for the driver, with the remainder of the job operating as plug and play with RCD protection.
6. Ensure correct connection of male to female plugs.
7. Each driver should accommodate no more than 4 lights
8. The total watts per light should not exceed the wattage capacity of the driver outlet.
9. Use a cable tie to secure the cable exiting the light directly above the fitting.
10. It is advisable to limit the switching of no more than three light groups together.

DATE: 04/10/24
JOB REF: 23060268-01
REVISION: A
CHECKED & APPROVED BY BREVITY LTD.
MATT BISHOP, CMENGNZ, CPENG
#243276
Brevity

Fire Compliance details

1. Consult with the architect or interior designer to determine if the ceiling or walling system is situated on a designated fire egress route.
2. Verify if the building is equipped with fire sprinkler systems, either installed or planned.
3. Our standard offer utilizes non-combustible Aluminium battens 6000 series (melting point: 660°C) in combination with nylon PA66 (plastic) clips.
4. For areas involving fire egress, utilize metal clips and aluminium battens as they offer higher melting points (melting at 1427°C).
5. Employ a Mild steel rondo ceiling grid system, with a melting point of 1427°C, for the remaining assembly.
6. Cedar & hemlock have a Group Number of 3 according to NZBCC3.4(a), ISO9705 & AS3837 standards.
7. Ensure the client has obtained approval from their fire engineers or certifier for the design proposal.
8. Adhere to BCA Specifications NZBC - C3.4(a) & NCC C1.10 requirements for walls and ceiling linings:
    - (a) Ensure the wall or ceiling lining system complies with the specified group number in Table below and, for buildings without a sprinkler system complying with Specification E1.5, meets one of the following: (i) A smoke growth rate index not exceeding 100; or (ii) An average specific extinction area less than 250 m2/kg.
    - (b) Determine the group number of the wall or ceiling lining and the smoke growth rate index or average specific extinction area in accordance with NZBCC1-C6 & AS 5637.1. Confirm that a fire engineer has reviewed the ISO5660 flow chart.

Area of *building*	**Performance determined under conditions described in ISO 9705: 1993**	
	***Buildings* not protected with an automatic *fire* sprinkler system**	***Buildings* protected with an automatic *fire* sprinkler system**
Wall/ceiling materials in sleeping areas where care or detention is provided	Material Group Number 1-S	Material Group Number 1 or 2
Wall/ceiling materials in exitways	Material Group Number 1-S	Material Group Number 1 or 2
Wall/ceiling materials in all *occupied spaces* in importance level 4 *buildings*	Material Group Number 1-S	Material Group Number 1 or 2
Internal surfaces of ducts for *HVAC systems*	Material Group Number 1-S	Material Group Number 1 or 2
Ceiling materials in crowd and sleeping uses except *household units* and where care or detention is provided	Material Group Number 1-S or 2-S	Material Group Number 1 or 2
Wall materials in crowd and sleeping uses except *household units* and where care or detention is provided	Material Group Number 1-S or 2-S	Material Group Number 1, 2, or 3
Wall/ceiling materials in occupied spaces in all other locations in *buildings*, including *household units*	Material Group Number 1, 2, or 3	Material Group Number 1, 2, or 3
External surfaces of ducts for *HVAC systems*	Material Group Number 1, 2, or 3	Material Group Number 1, 2, or 3
Acoustic treatment and pipe insulation within airhandling plenums in sleeping uses	Material Group Number 1, 2, or 3	Material Group Number 1, 2, or 3

DATE: 04/10/24
JOB REF: 23060268-01
REVISION: A
CHECKED & APPROVED BY BREVITY LTD.
MATT BISHOP, CMENGNZ, CPENG
#243276
Brevity

Sound absorption estimates

Nacci PET backing for interior applications. PET backing is provided, delivering excellent acoustic performance to enhance the overall environment. It is supplied in set widths to fit perfectly between the mounting tracks.

Thermally bonded polyester fibre insulation is specifically crafted to deliver exceptional sound absorption across various frequencies

- Offered in diverse thicknesses and densities to suit different needs.
- Engineered with carefully balanced fibre blends to maximize acoustic and thermal performance in a wide array of industrial, community, residential, and commercial settings.
- Non-irritating, eliminating the need for protective clothing or masks during installation.
- Standardly available Black, other colours available upon request.

Acoustic performance below are estimates based on comparable material testing by others

Frequencies	125hz	250hz	500hz	1000hz	2000hz	4000hz	Alpha W	NRC
25mm thickness	0.14	0.34	0.61	0.79	0.86	0.96	0.71	0.71

DATE: 04/10/24
JOB REF: 23060268-01
REVISION: A
CHECKED & APPROVED BY BREVITY LTD.
MATT BISHOP, CMENGNZ, CPENG
#243276
Brevity

Materials & Specifications

Grade: Natural Select grade timber consists of a minimum of 2/3 Select grade and a maximum of 1/3 Standard grade, Minimal surface checking is permitted, and grading is applied to the top face only.

Timber Batten Length: Timber is supplied in random lengths ranging from 0.9m to 6.0m unless otherwise specified. The average length is approximately +/- 2.7m, with a maximum of 15% of the supply being under 1.8m.

Colour Selection: Colour variation is natural and not part of the grading process. Colours can range significantly from rich browns to greys due to the natural characteristics of timber.

Species Selection: Timber is selected based on known trade names such as Western red, cedar Yellow, cedar Hemlock, Sapele Mahogany, Douglas Fir, Rosewood. Other species are available upon request.

Durability Rating NZBC (B2AS1) & (AS 5604): Please see Building standards for durability ratings of standard and non-standard timbers.

Profile Accuracy: Manufactured profiles have a tolerance of +/- 0.3 mm in dimension and profile. Individual boards may swell or contract due to variations in timber moisture and characteristics when exposed to the elements.

Maintenance: Regular maintenance is necessary for natural timber to prevent cracking and twisting. The frequency of oil application depends on factors such as sun exposure, rainfall, UV blockage, and western sun exposure. Cutek oils are recommended for maintenance to retain the timber's natural beauty and colour.

Interior Surface Finishes: UV coatings are suitable for interior applications and areas out of direct sunlight and rain. Satin finishes enhance the character and colour of Western Red Cedar, while washes provide a maintenance-free option for internal and out-of-weather applications. Satin washes offer striking colours and consistency, while matte washes provide trendy colours with a matte finish on Hemlock timber.