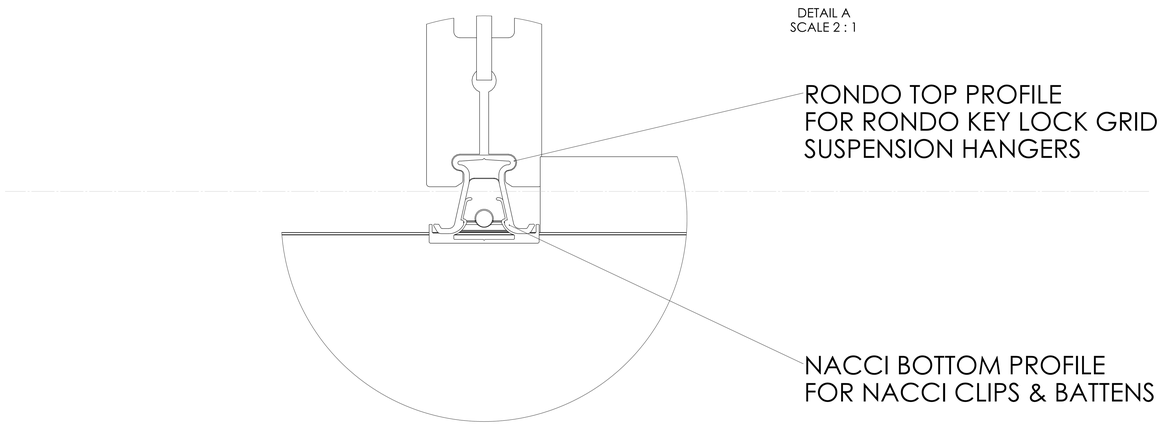
DETAIL A
SCALE 2 : 1
RONDO TOP PROFILE
FOR RONDO KEY LOCK GRID
SUSPENSION HANGERS
NACCI BOTTOM PROFILE
FOR NACCI CLIPS & BATTENS

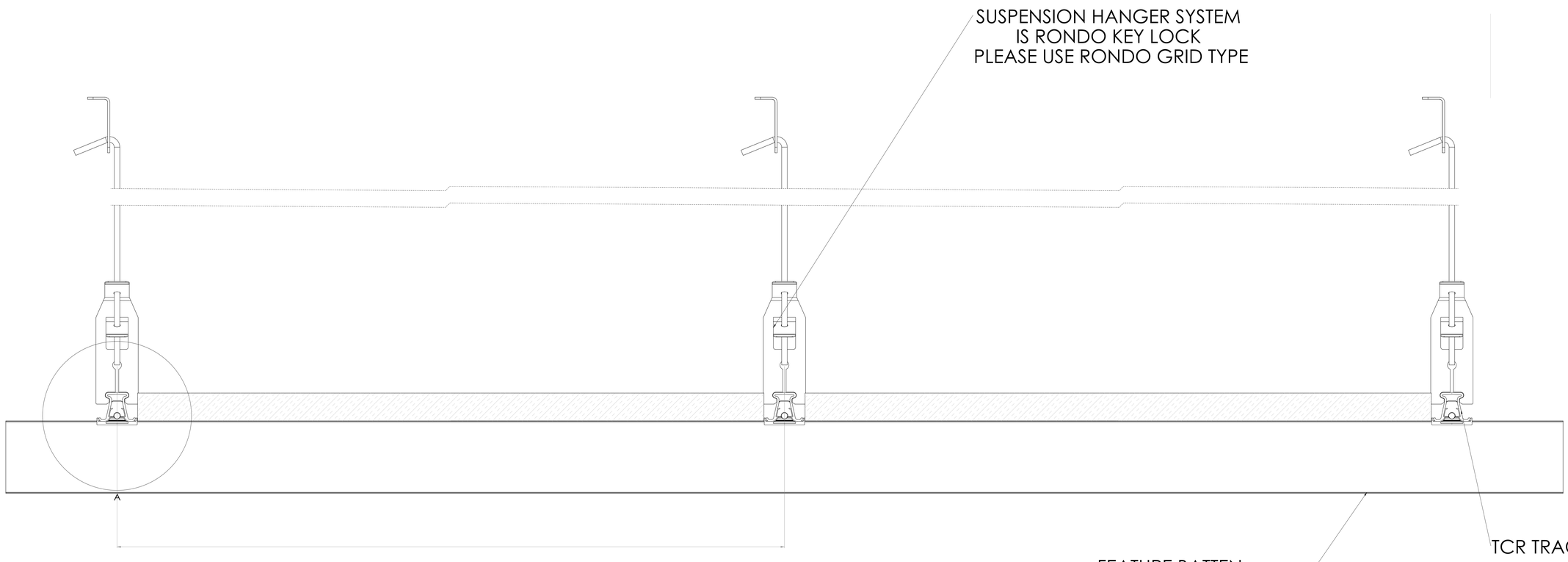
SUSPENSION HANGER SYSTEM
IS RONDO KEY LOCK
PLEASE USE RONDO GRID TYPE
A
Nacci Aluminium
TCR mounting track
Spacing is determined
by loading. (see Span tables)
FEATURE BATTEN
TIMBER OR ALUMINIUM
SUPPLIED BY NACCI
TCR TRACK
SUPPLIED BY NACCI
INTERGRATED WITH
RONDO SUSPENSION HANGER SYSTEM